LECTURE 6

Multi-Cycle
Datapath and Control

SINGLE-CYCLE IMPLEMENTATION

As we've seen, single-cycle implementation, although easy to implement, could potentially be very inefficient.

In single-cycle, we define a clock cycle to be the length of time needed to execute a single instruction. So, our lower bound on the clock period is the length of the most-time consuming instruction.

In our previous example, our jump instruction needs only 4ns but our clock period must be 13ns to accommodate the load word instruction!

MULTI-CYCLE IMPLEMENTATION

We can get around some of the disadvantages by introducing a little more complexity to our datapath.

Instead of viewing the instruction as one big task that needs to be performed, in multi-cycle the instructions are broken up into smaller fundamental steps.

As a result, we can **shorten the clock period** and **perform the instructions incrementally across multiple cycles**.

What are these fundamental steps? Well, let's take a look at what our instructions actually need to do…

R-FORMAT STEPS

- An instruction is fetched from instruction memory and the PC is incremented.
- Read two source register values from the register file.
- Perform the ALU operation on the register data operands.
- Write the result of the ALU operation to the register file.

LOAD STEPS

- An instruction is fetched from instruction memory and the PC is incremented.
- Read a source register value from the register file and sign-extend the 16 least significant bits of the instruction.
- Perform the ALU operation that computes the sum of the value in the register and the sign-extended immediate value from the instruction.
- Access data memory at the address given by the result from the ALU.
- Write the result of the memory value to the register file.

STORE STEPS

- An instruction is fetched from instruction memory and the PC is incremented.
- Read two source register values from the register file and sign-extend the 16 least significant bits of the instruction.
- Perform the ALU operation that computes the sum of the value in the register and the sign-extended immediate value from the instruction.
- Update data memory at the address given by the result from the ALU.

BRANCH EQUAL(BEQ) STEPS

- An instruction is fetched from instruction memory and the PC is incremented.
- Read two source register values from the register file and sign-extend the 16 least significant bits of the instruction and then left shifts it by two.
- The ALU performs a subtract on the data values read from the register file. The value of PC+4 is added with the sign-extended left-shifted-by-two immediate value from the instruction, which results in the branch target address.
- The Zero result from the ALU is used to decide which adder result should be used to update the PC.

JUMP STEPS

- An instruction is fetched from instruction memory and the PC is incremented.
- Concatenate the four most significant bits of PC+4, the 26 least significant bits of the instruction, and two zero bits. Assign the result to the PC.

GENERAL STEPS

So, generally, we can say we need to perform the following steps:

1. Instruction fetch.
2. Instruction decode and register fetch.
3. Execution, memory address computation, branch completion, or jump completion.
4. Memory access or R-type instruction completion.
5. Memory read completion.

MULTI-CYCLE DATAPATH

Here is a general overview of our new multi-cycle datapath.

- We now have a <u>single memory element</u> that interacts with both instructions and data.
- <u>Single ALU unit</u>, no dedicated adders.
- Several <u>temporary registers</u>.

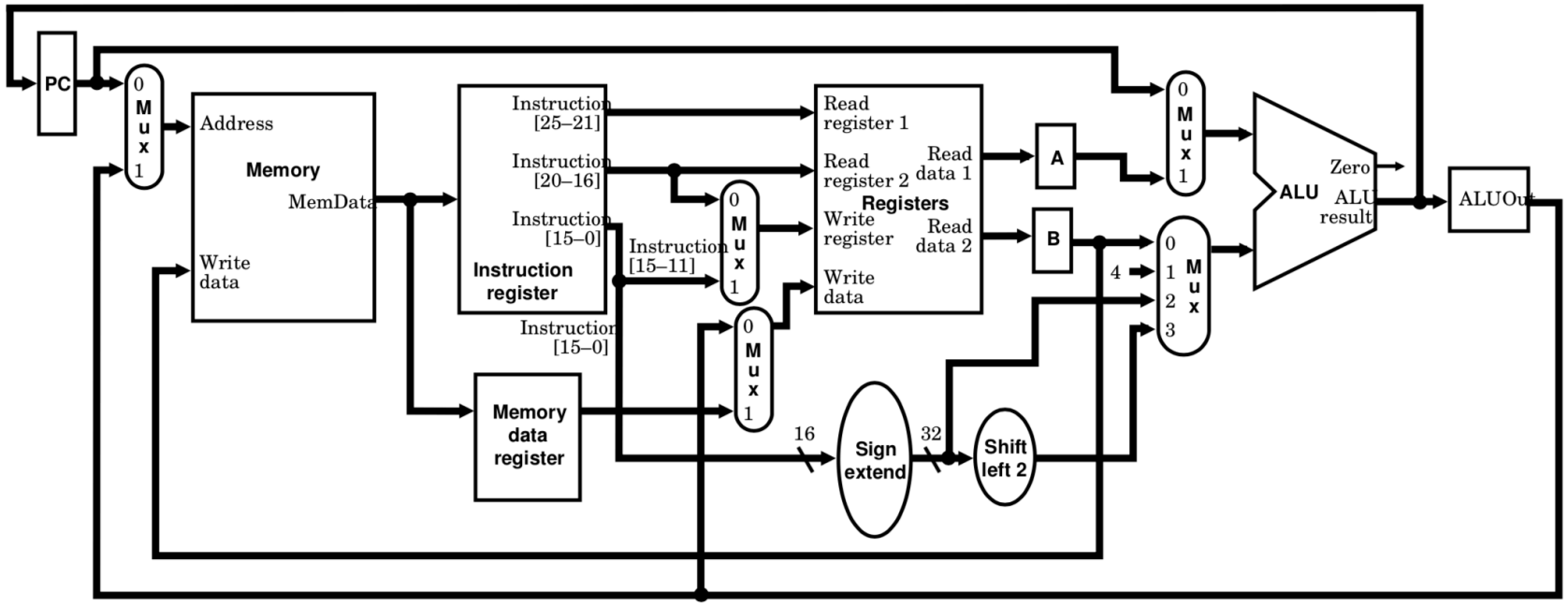

MULTI-CYCLE DATAPATH

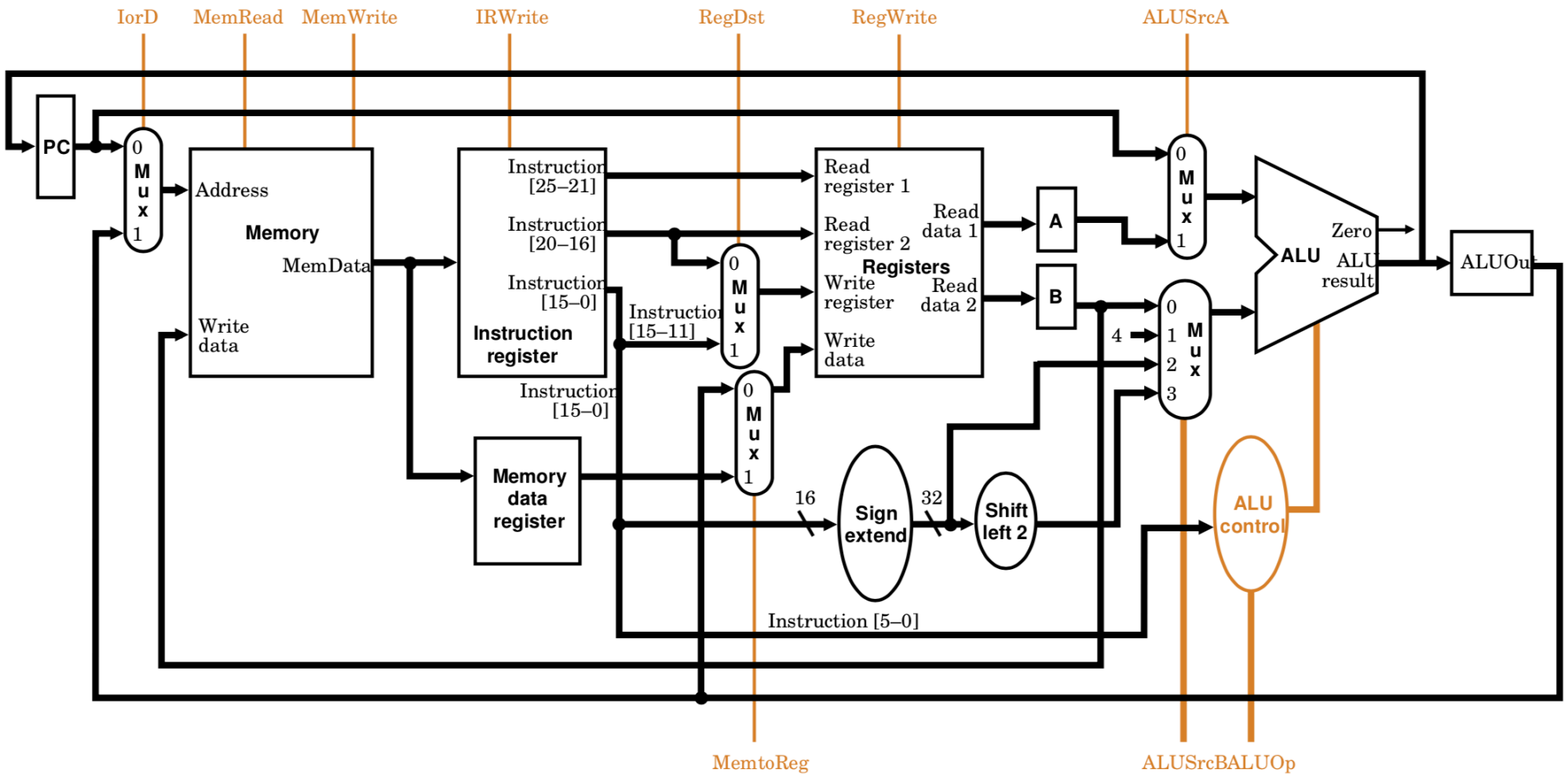

MULTI-CYCLE DATAPATH

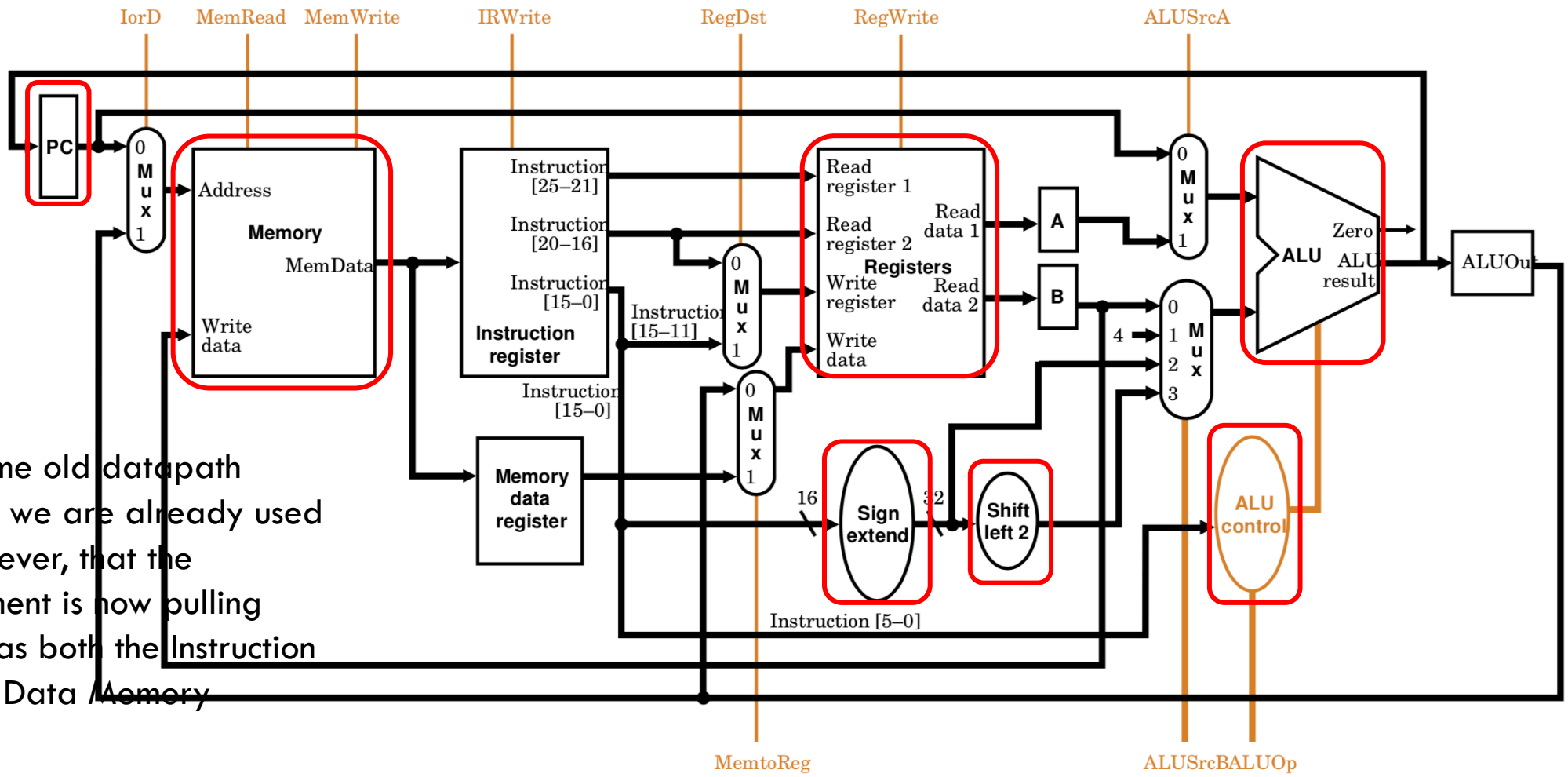

These are some old datapath elements that we are already used to. Note, however, that the Memory element is now pulling double-duty as both the Instruction Memory and Data Memory element.

MULTI-CYCLE DATAPATH

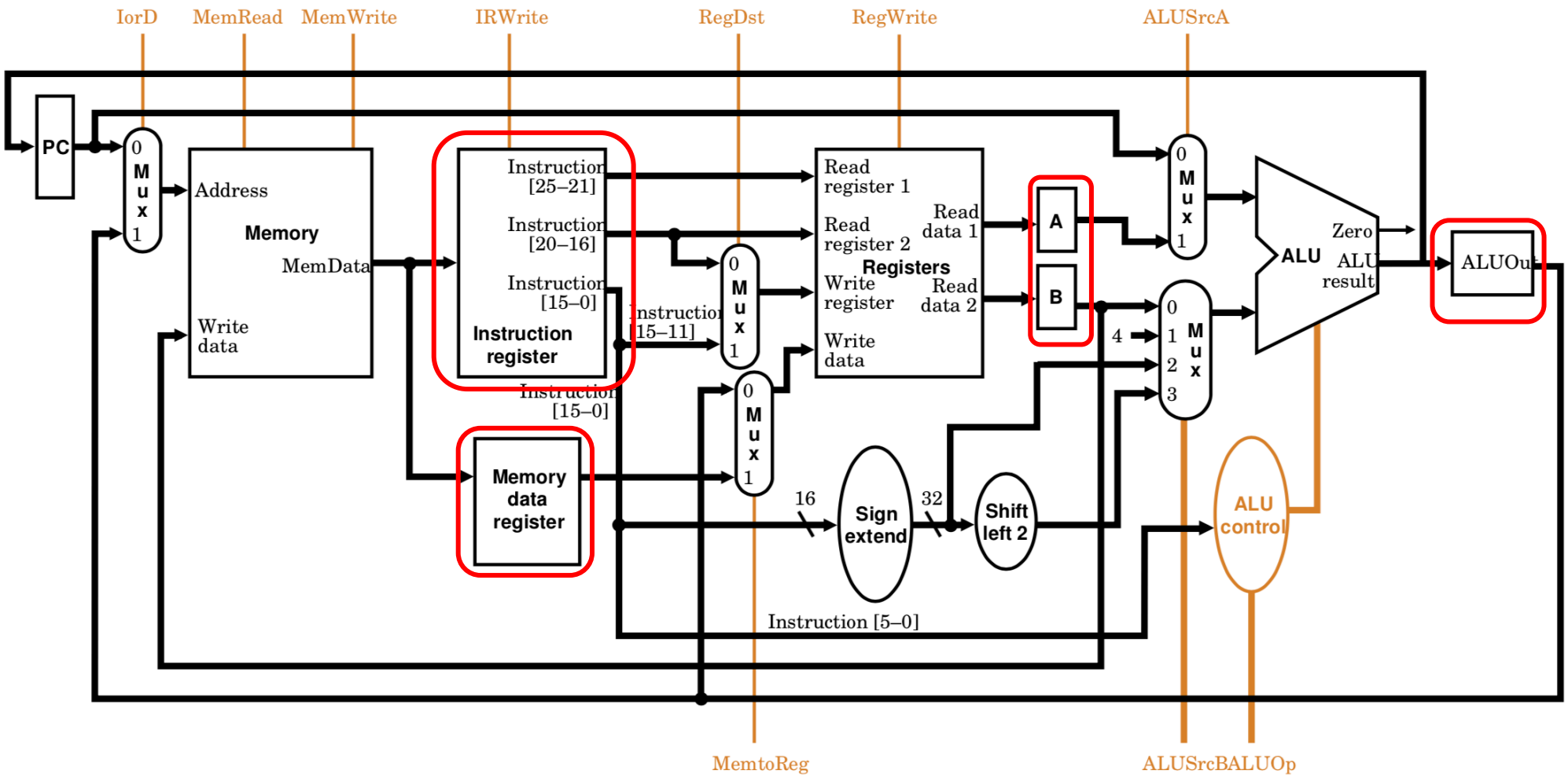

MULTI-CYCLE DATAPATH

<u>New temporary registers:</u>

- **Instruction register (IR)** – holds the instruction after its been pulled from memory.
- **Memory data register (MDR)** – temporarily holds data grabbed from memory until the next cycle.
- **A** – temporarily holds the contents of read register 1 until the next cycle.
- **B** – temporarily holds the contents of read register 2 until the next cycle.
- **ALUout** – temporarily holds the contents of the ALU until the next cycle.

Note: every register is written on every cycle except for the instruction register.

MULTI-CYCLE DATAPATH

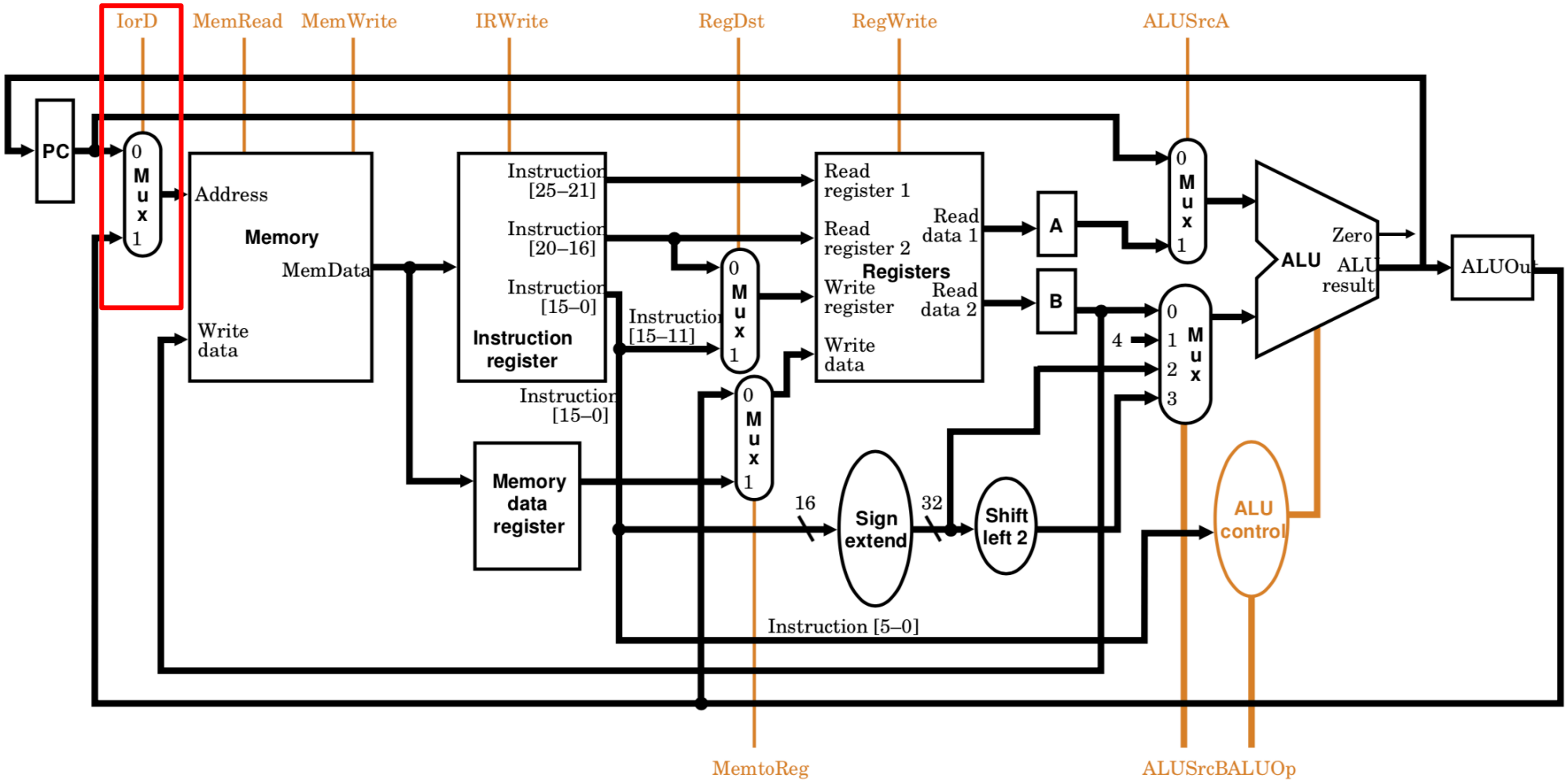

MULTI-CYCLE DATAPATH

The **IorD** control signal.

- Deasserted: the contents of PC is used as the address for the memory unit.
- Asserted: The contents of ALUout is used as the address for the memory unit.

MULTI-CYCLE DATAPATH

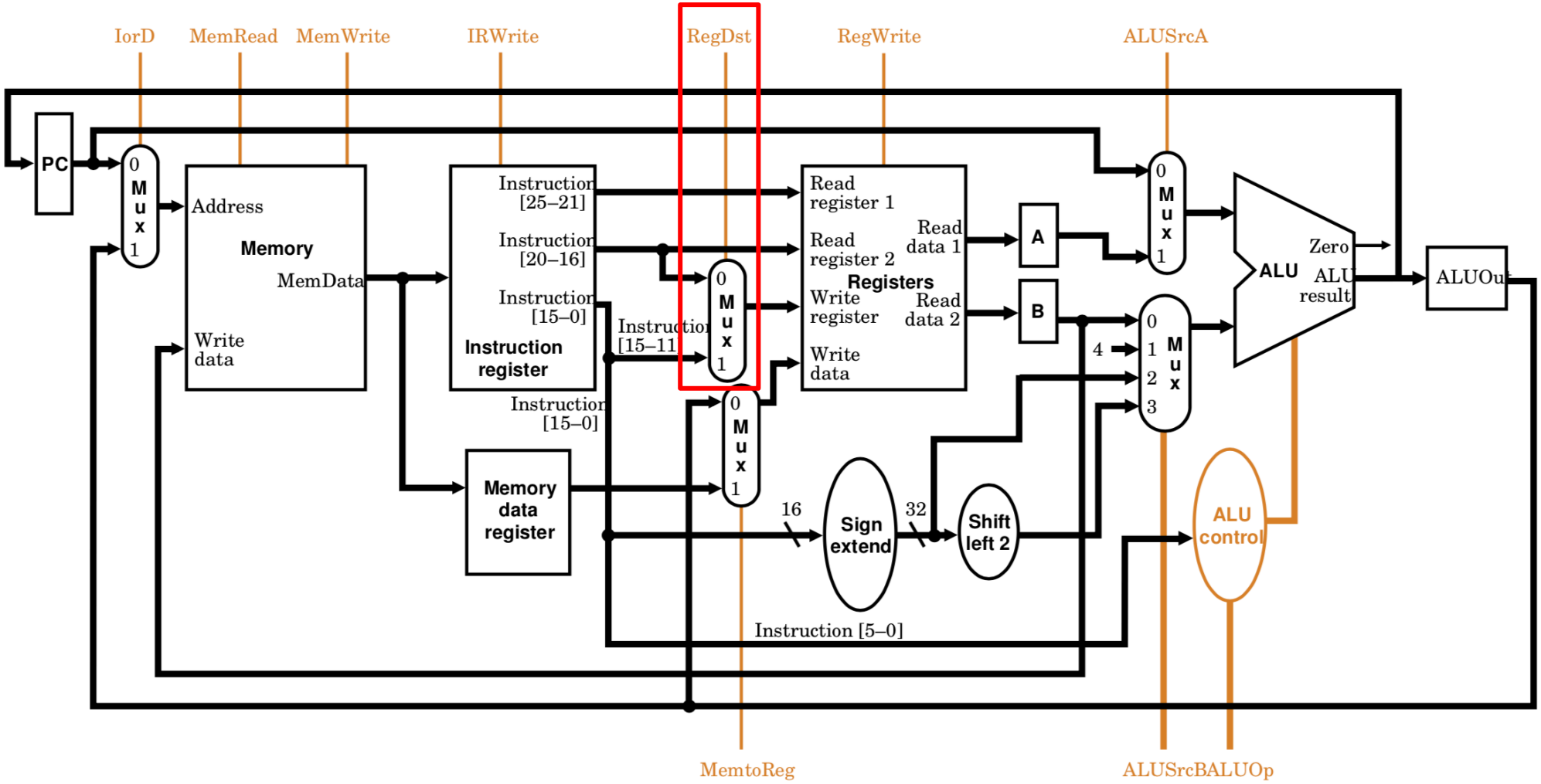

MULTI-CYCLE DATAPATH

The **RegDst** control signal.

- Deasserted: the register file destination number for the Write register comes from the rt field.
- Asserted: the register file destination number for the Write register comes from the rd field.

MULTI-CYCLE DATAPATH

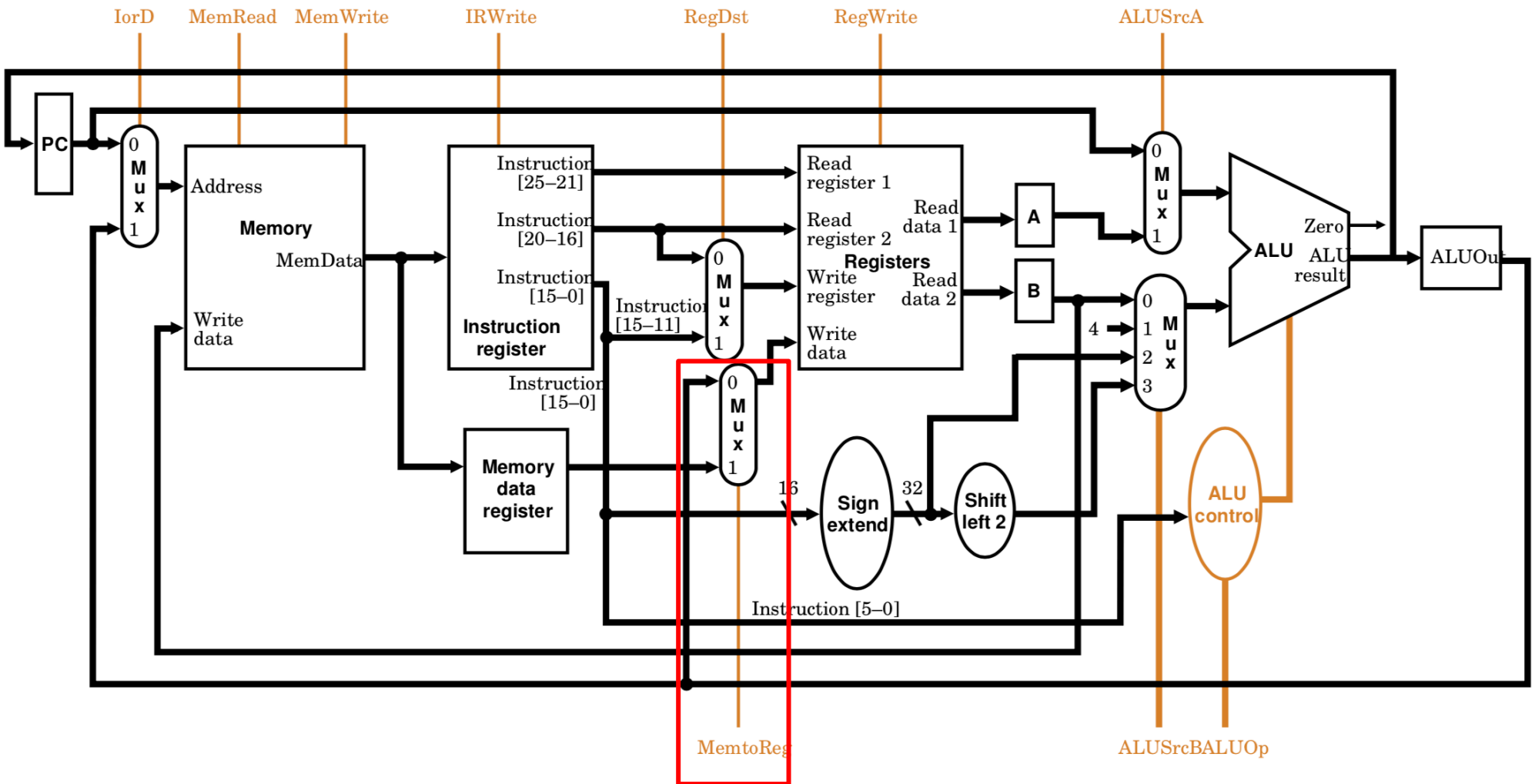

MULTI-CYCLE DATAPATH

The **MemToReg** control signal.

- Deasserted: the value fed to the register file input comes from ALUout.
- Asserted: the value fed to the register file input comes from MDR.

MULTI-CYCLE DATAPATH

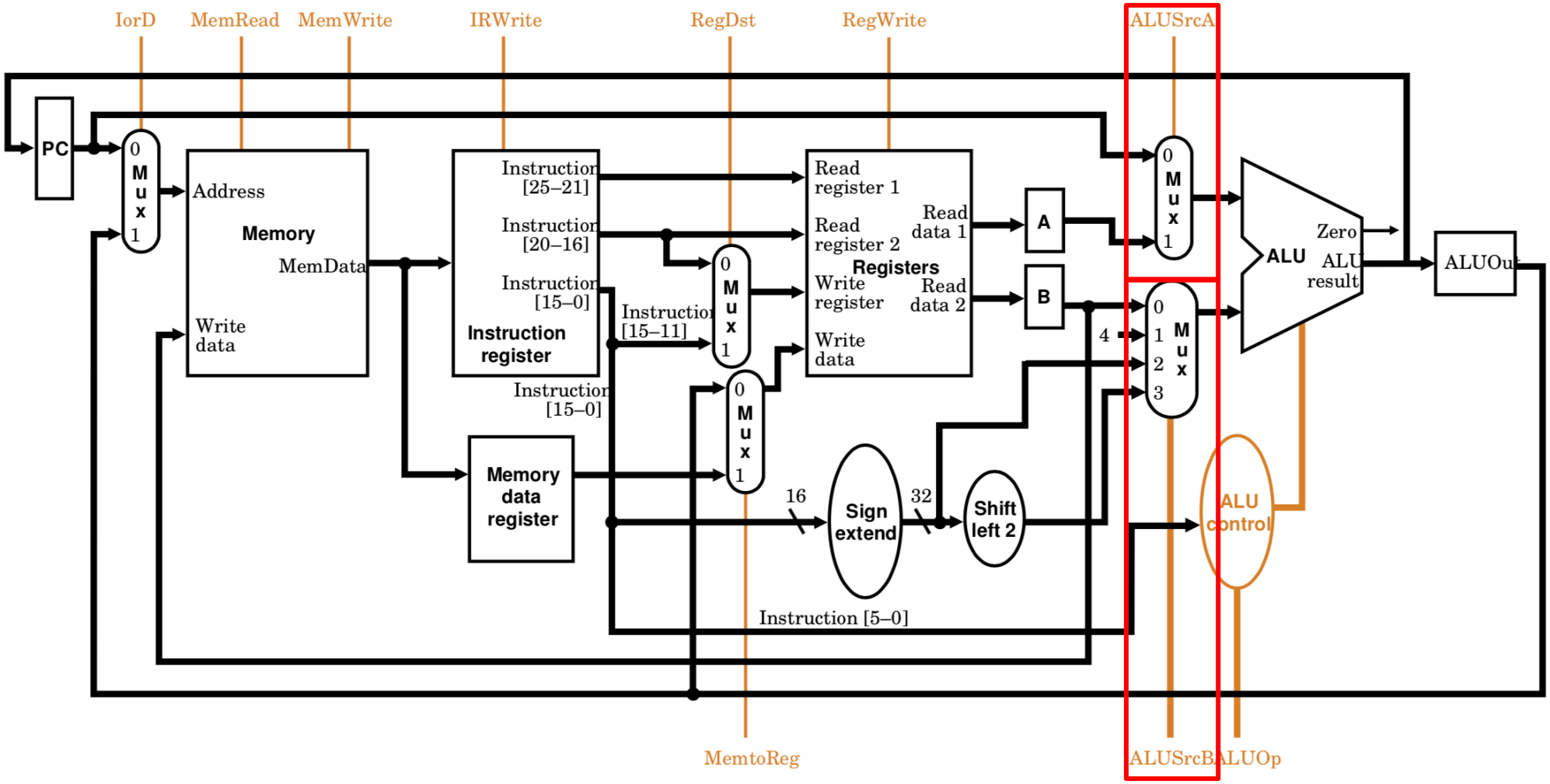

MULTI-CYCLE DATAPATH

One of the changes we've made is that we're using only a single ALU. We have no dedicated adders on the side. To implement this change, we need to add some multiplexors.

- **ALUSrcA** multiplexor chooses between the contents of PC or the contents of temporary register A as the first operand.
- **ALUSrcB** multiplexor chooses between the contents of temporary register B, the constant 4, the immediate field, or the left-shifted immediate field as the second operand.

MULTI-CYCLE DATAPATH AND CONTROL

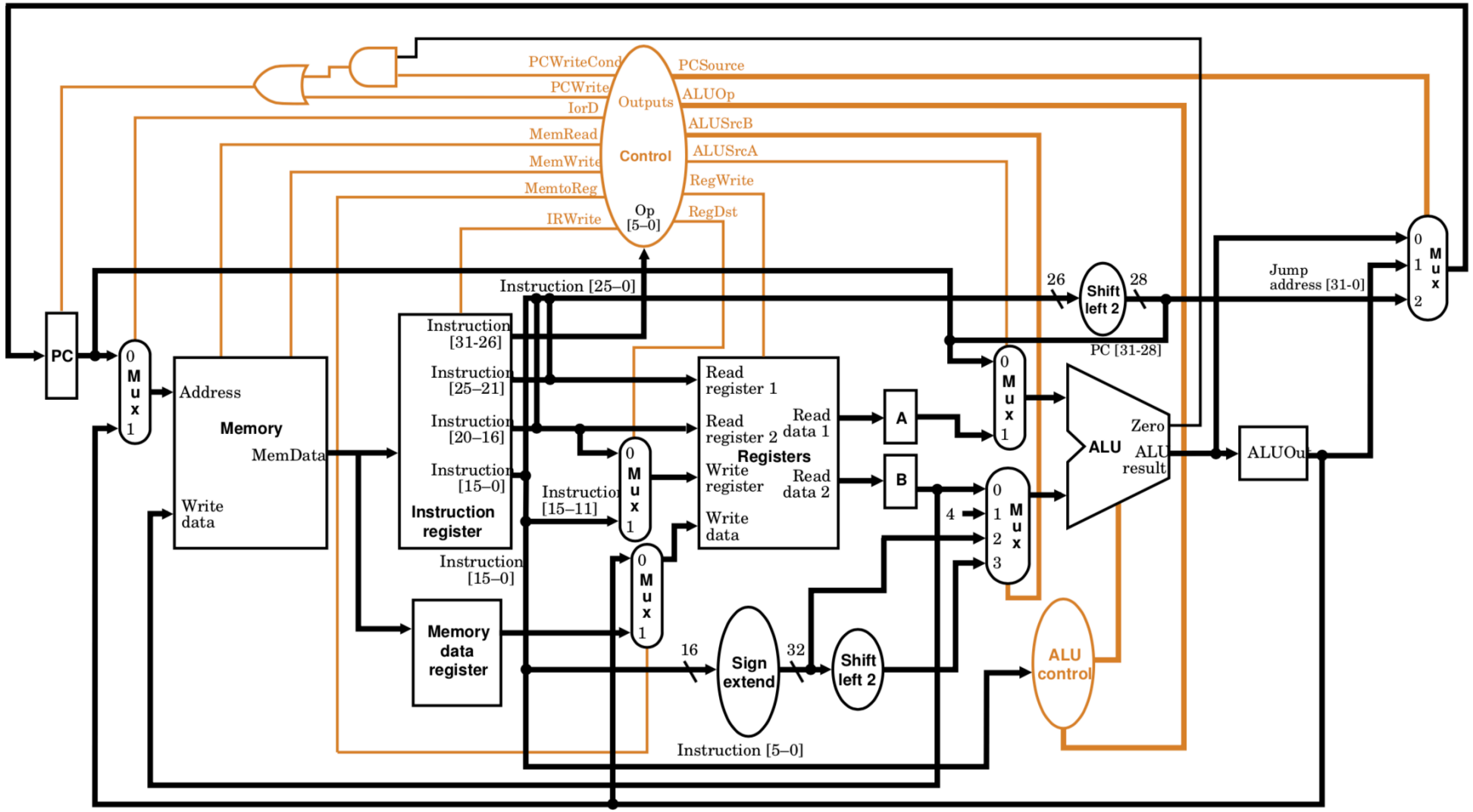

MULTI-CYCLE DATAPATH AND CONTROL

1-Bit Signal Name	Effect When Deasserted	Effect When Asserted
RegDst	The register file destination number for the Write register comes from the rt field.	The register file destination number for the Write register comes from the rd field.
RegWrite	None	Write register is written with the value of the Write data input.
ALUSrcA	The first ALU operand is PC.	The first ALU operand is A register.
MemRead	None	Content of memory at the location specified by the Address input is put on the Memory data output.
MemWrite	None	Memory contents of the location specified by the Address input is replaced by the value on the Write data input.

MULTI-CYCLE DATAPATH AND CONTROL

1-Bit Signal Name	Effect When Deasserted	Effect When Asserted
MemToReg	The value fed to the register file input is ALUout.	The value fed to the register file input comes from Memory data register.
IorD	The PC supplies the Address to the Memory element.	ALUOut is used to supply the address to the memory unit.
IRWrite	None	The output of the memory is written into the Instruction Register (IR).
PCWrite	None	The PC is written; the source is controlled by PC-Source.
PCWriteCond	None	The PC is written if the Zero output from the ALU is also active.

MULTI-CYCLE DATAPATH AND CONTROL

2-bit Signal	Value	Effect
ALUOp	00	The ALU performs an add operation.
	01	The ALU performs a subtract operation.
	10	The funct field of the instruction determines the operation.
ALUSrcB	00	The second input to ALU comes from the B register.
	01	The second input to ALU is 4.
	10	The second input to the ALU is the sign-extended, lower 16 bits of the Instruction Register (IR).
	11	The second input to the ALU is the sign-extended, lower 16 bits of the IR shifted left by 2 bits.
PCSource	00	Output of the ALU (PC+4) is sent to the PC for writing.
	01	The contents of ALUOut (the branch target address) are sent to the PC for writing.
	10	The jump target address (IR[25-0] shifted left 2 bits and concatenated with PC + 4[31-28]) is sent to the PC for writing.

MULTI-CYCLE DATAPATH AND CONTROL

Ok, so we already observed that our instructions can be roughly broken up into the following steps:

1. Instruction fetch
2. Instruction decode and register fetch
3. Execution, memory address computation, branch completion, or jump completion.
4. Memory access or R-type instruction completion.
5. Memory read completion.

Instructions take 3-5 of the steps to complete. The first two are performed identically in all instructions.

INSTRUCTION FETCH STEP

```
IR = Memory[PC];
PC = PC + 4;
```

Operations:

- Send contents of PC to the memory element as the address.
- Read instruction from memory.
- Write instruction into IR for use in next cycle.
- Increment PC by 4.

INSTRUCTION FETCH STEP

Signal	Value
PCWrite	
IorD	
MemRead	
MemWrite	
IRWrite	
PCSource	
ALUOp	
ALUSrcB	
ALUSrcA	
RegWrite	

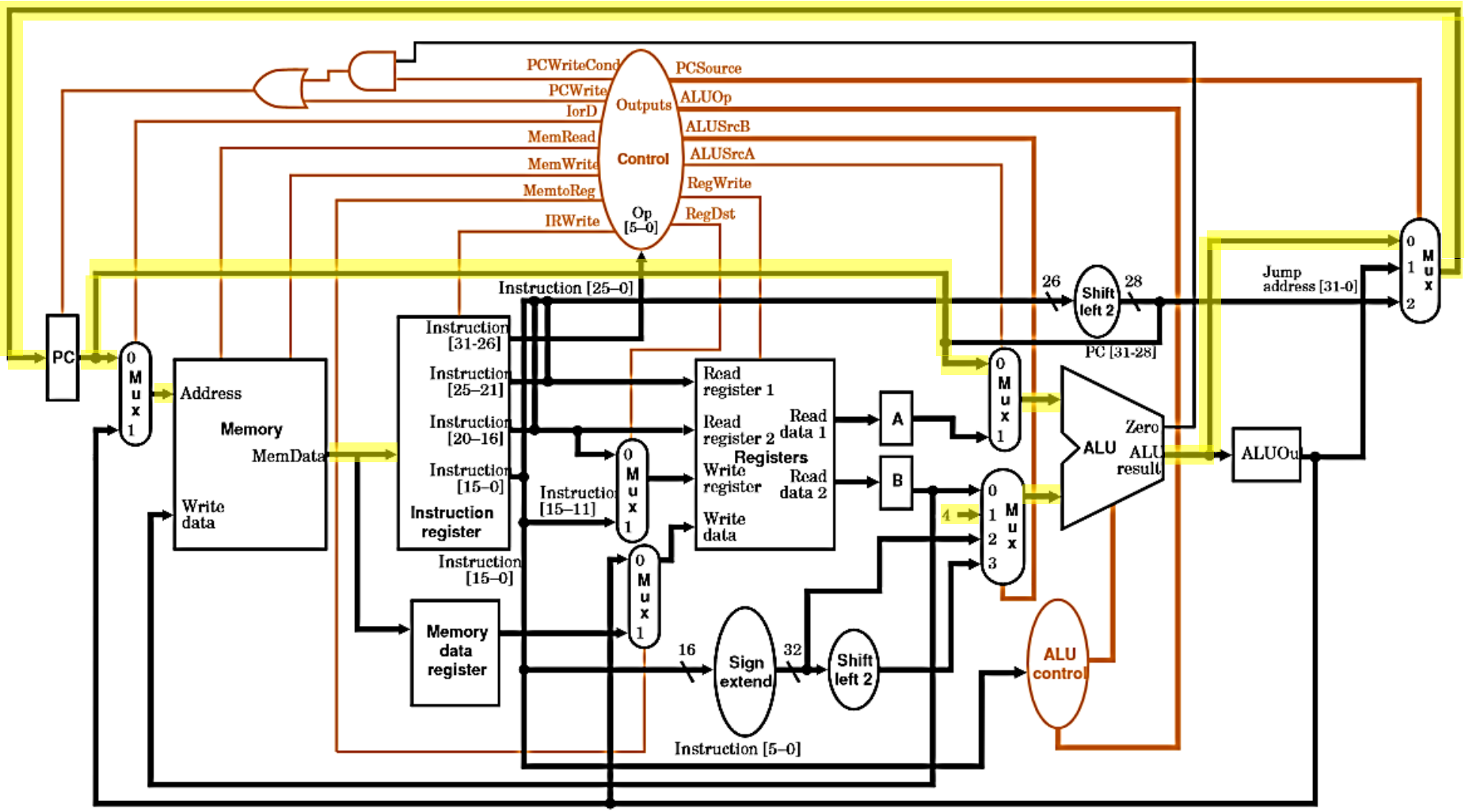

INSTRUCTION FETCH STEP

Signal	Value
PCWrite	1
IorD	0
MemRead	1
MemWrite	0
IRWrite	1
PCSource	00
ALUOp	00
ALUSrcB	01
ALUSrcA	0
RegWrite	0

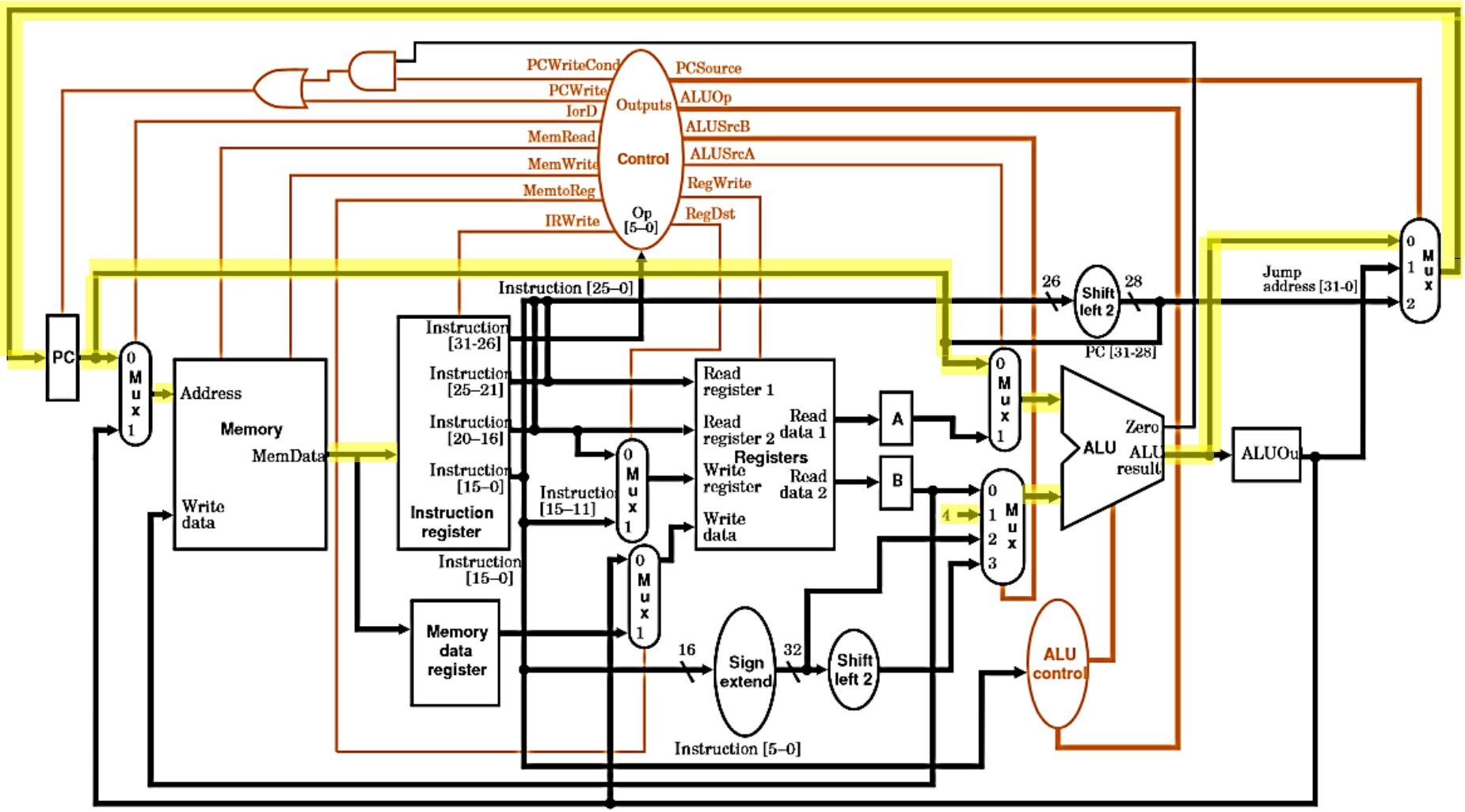

INSTRUCTION DECODE + REG FETCH STEP

```
A = Reg[IR[25-21]];
B = Reg[IR[20-16]];
ALUOut = PC + (sign-extend(IR[15-0]) << 2);
```

Operations:

- Decode instruction.
- Optimistically read registers.
- Optimistically compute branch target.

INSTRUCTION DECODE + REG FETCH STEP

Signal	Value
ALUOp	
ALUSrcB	
ALUSrcA	

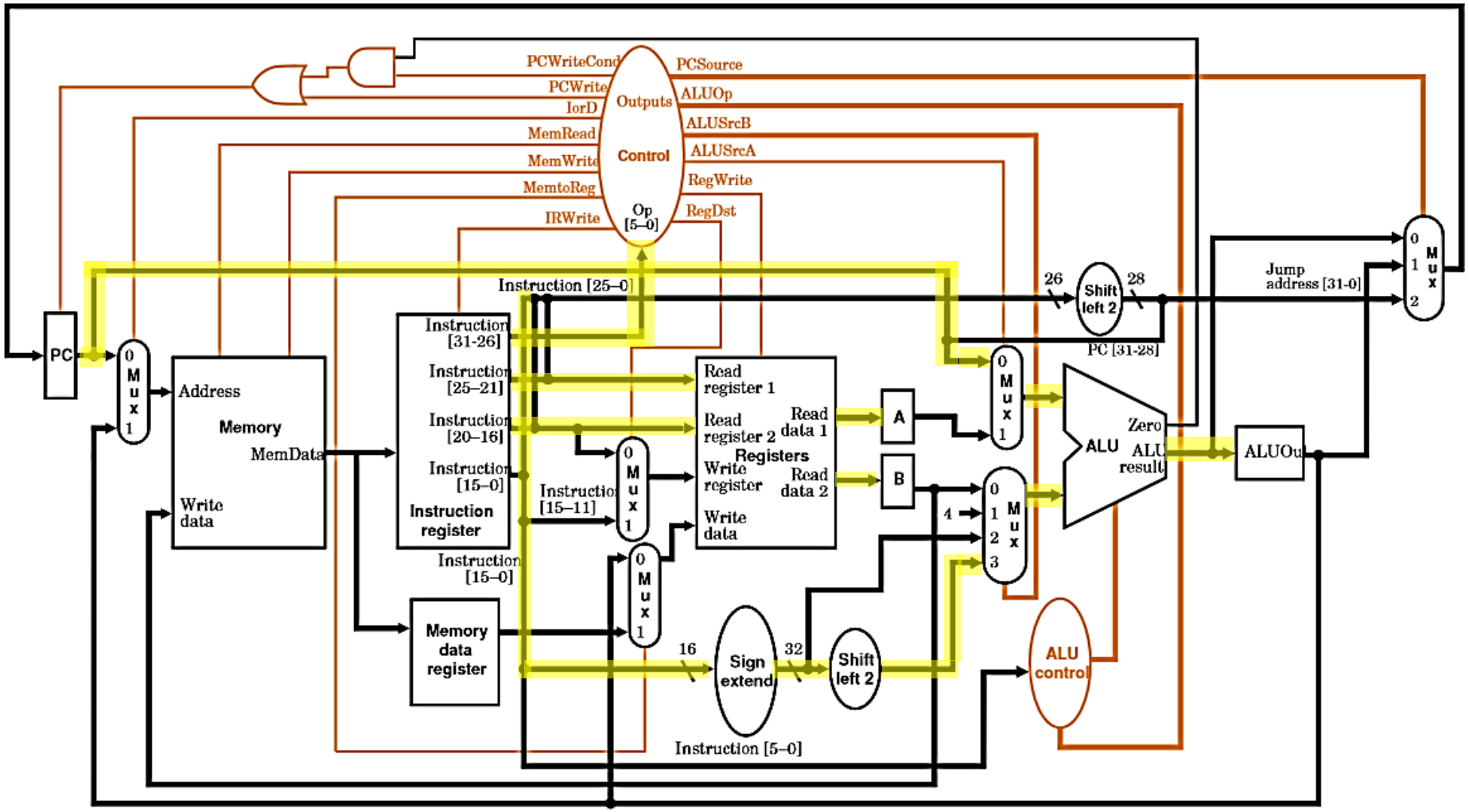

INSTRUCTION DECODE + REG FETCH STEP

Signal	Value
ALUOp	00
ALUSrcB	11
ALUSrcA	0

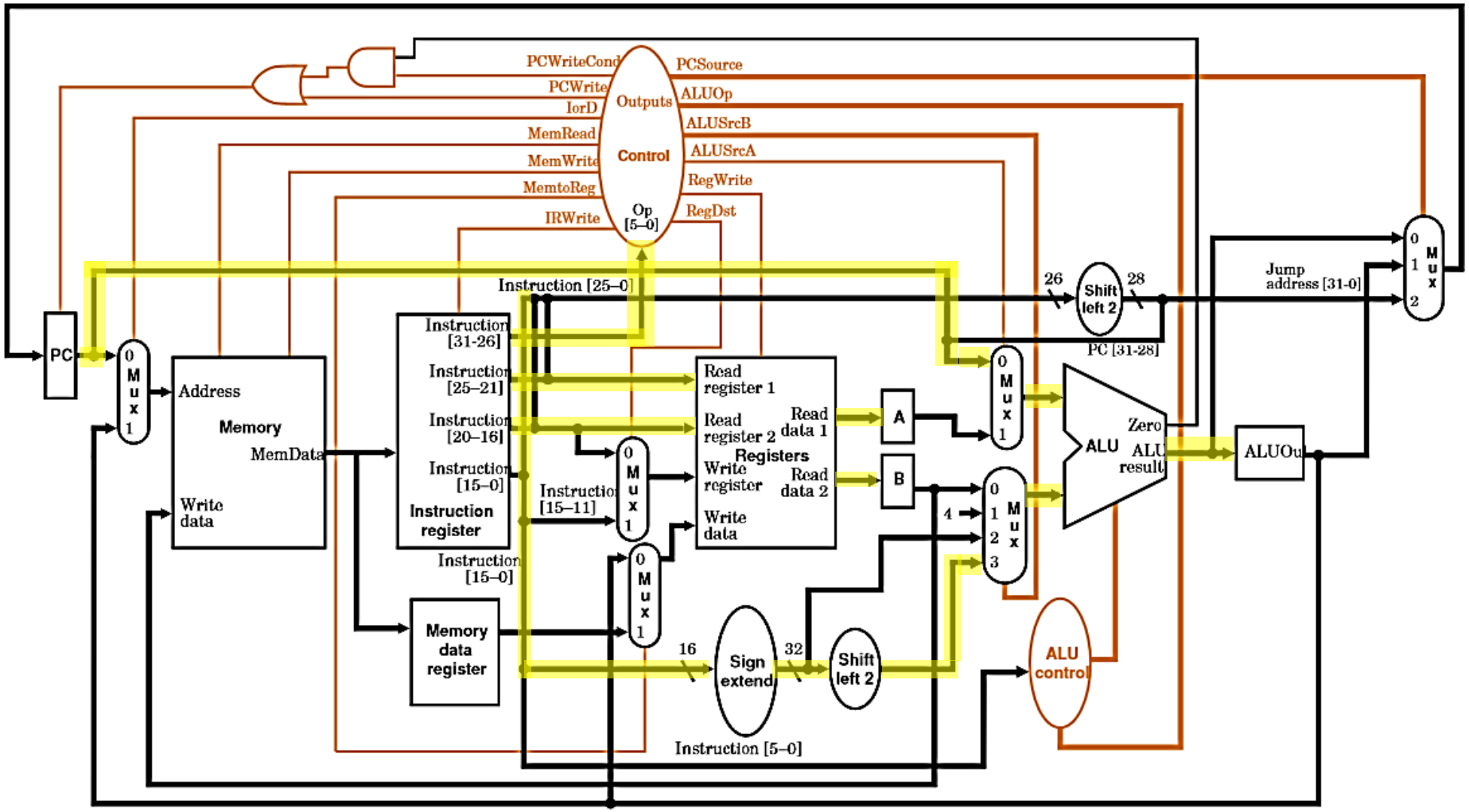

EXECUTION STEP

Here is where our instructions diverge.

- Memory reference:
  - `ALUOut = A + sign-extend(IR[15-0]);`
- Arithmetic-logical reference:
  - `ALUOut = A op B;`
- Branch:
  - `if (A == B) PC = ALUOut;`
- Jump
  - `PC = PC[31-28] || (IR[25-0] << 2);`

EXECUTION: MEMORY REFERENCE

Signal	Value
ALUOp	00
ALUSrcB	10
ALUSrcA	1

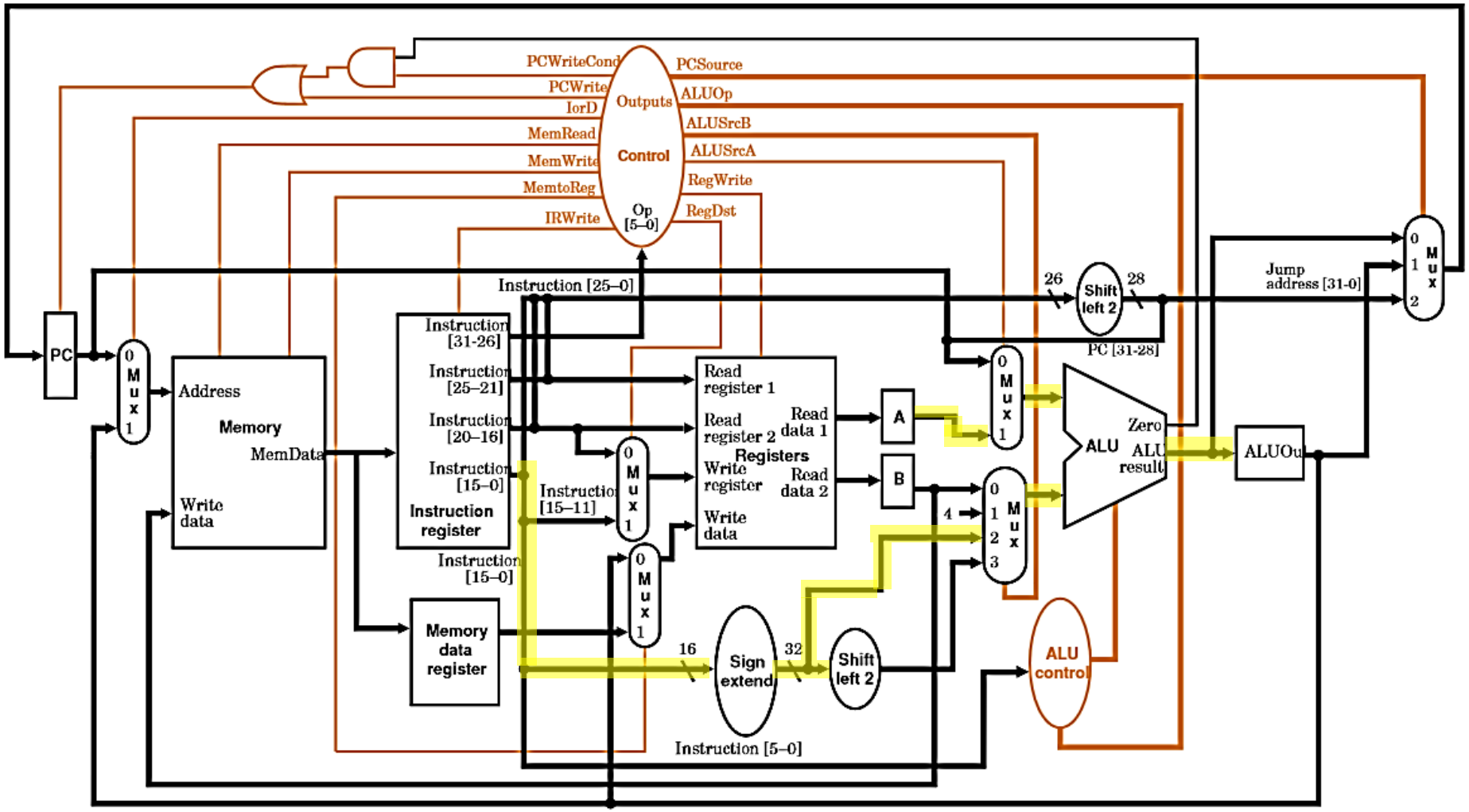

EXECUTION: ARITHMETIC/LOGICAL OP

Signal	Value
ALUOp	10
ALUSrcB	00
ALUSrcA	1

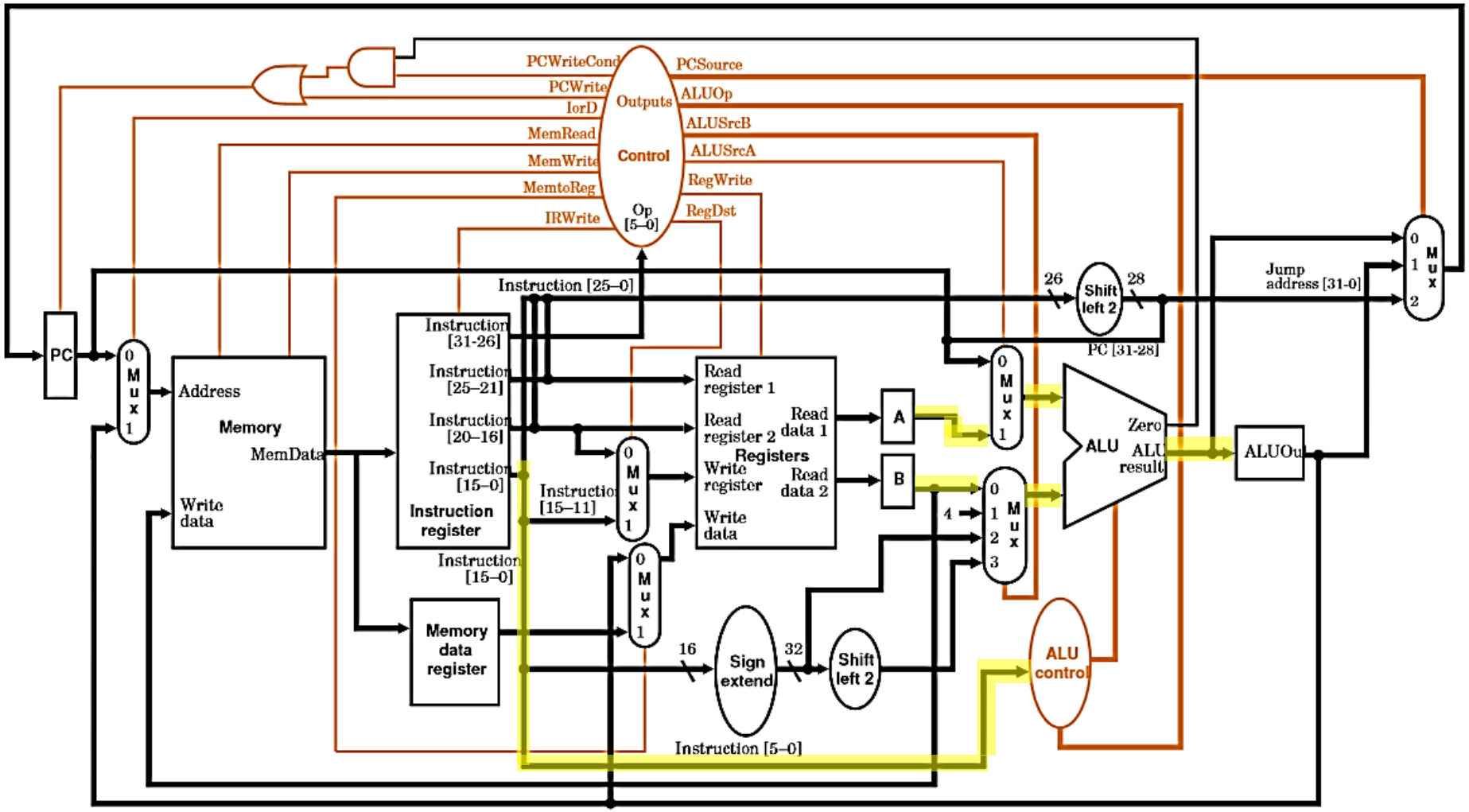

EXECUTION: BRANCH

Signal	Value
ALUOp	01
ALUSrcB	00
ALUSrcA	1
PCSource	01
PCWriteCond	1

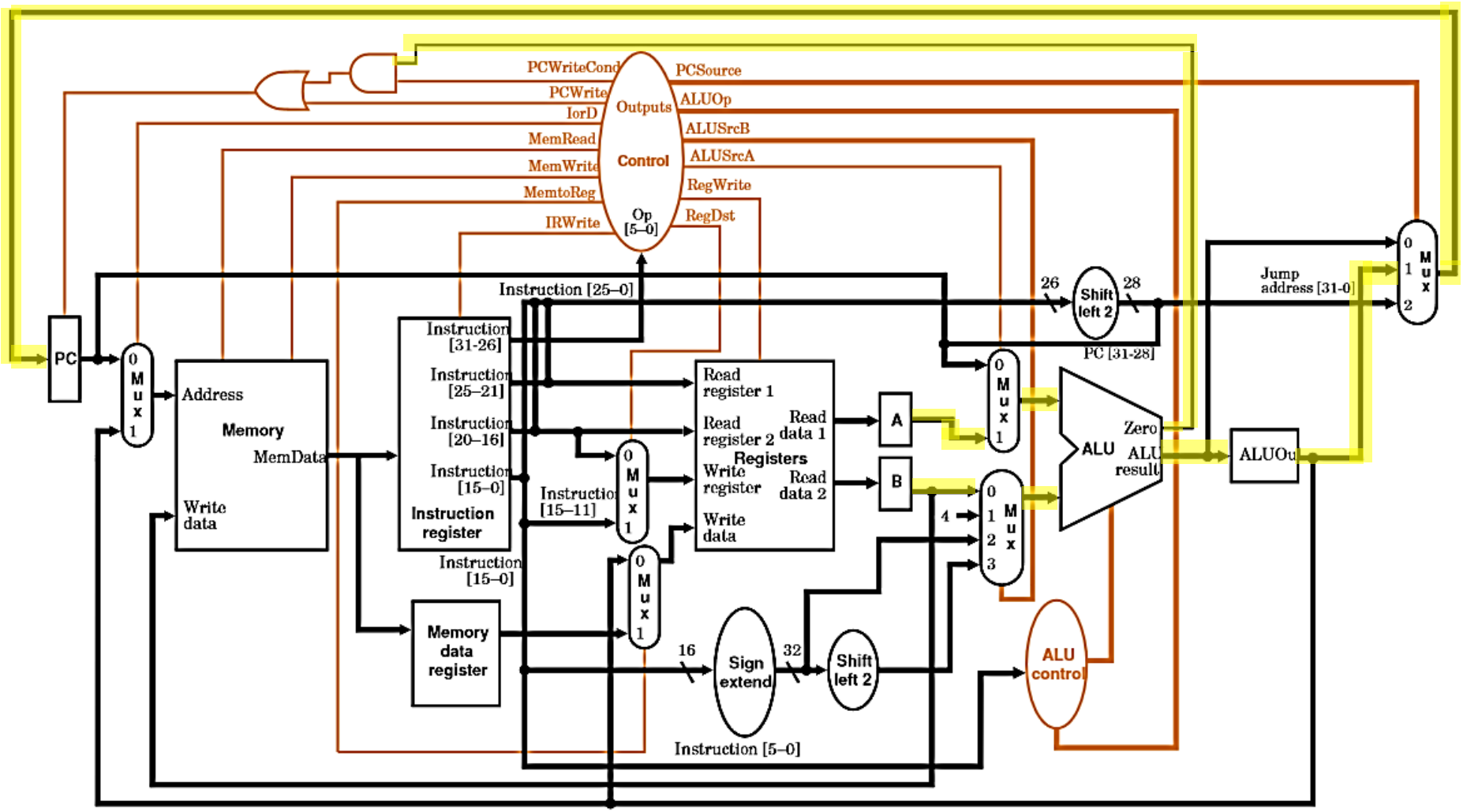

EXECUTION: JUMP

Signal	Value
PCSource	10
PCWrite	1

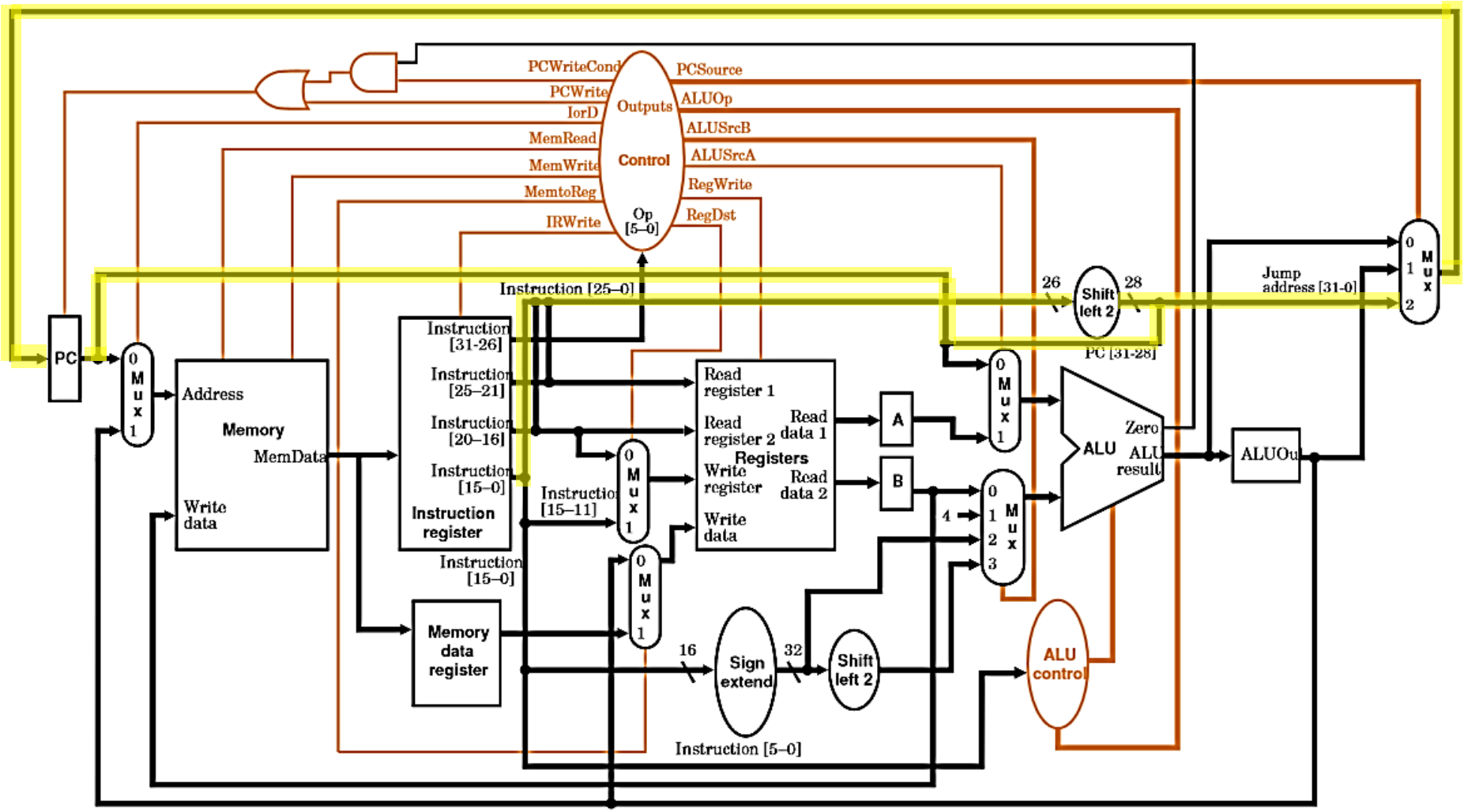

MEMORY ACCESS/R-TYPE COMPLETION STEP

- Memory reference:
  - Load: `MDR = Memory[ALUOut];`
  - Store: `Memory[ALUOut] = B;`
- R-type instruction:
  - `Reg[IR[15-11]] = ALUOut;`

MEMORY ACCESS: LOAD

Signal	Value
MemRead	1
IorD	1
IRWrite	0

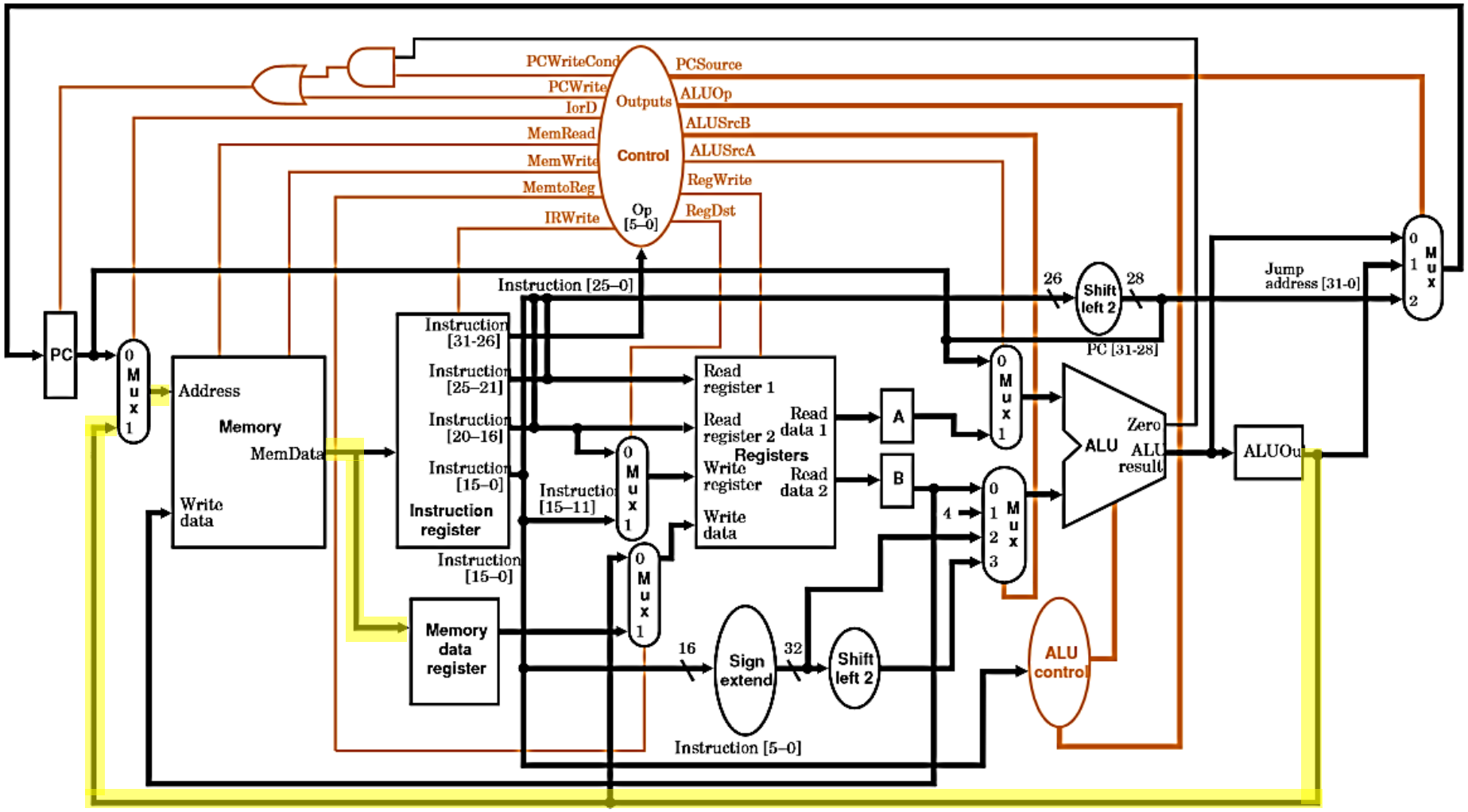

MEMORY ACCESS: STORE

Signal	Value
MemWrite	1
IorD	1

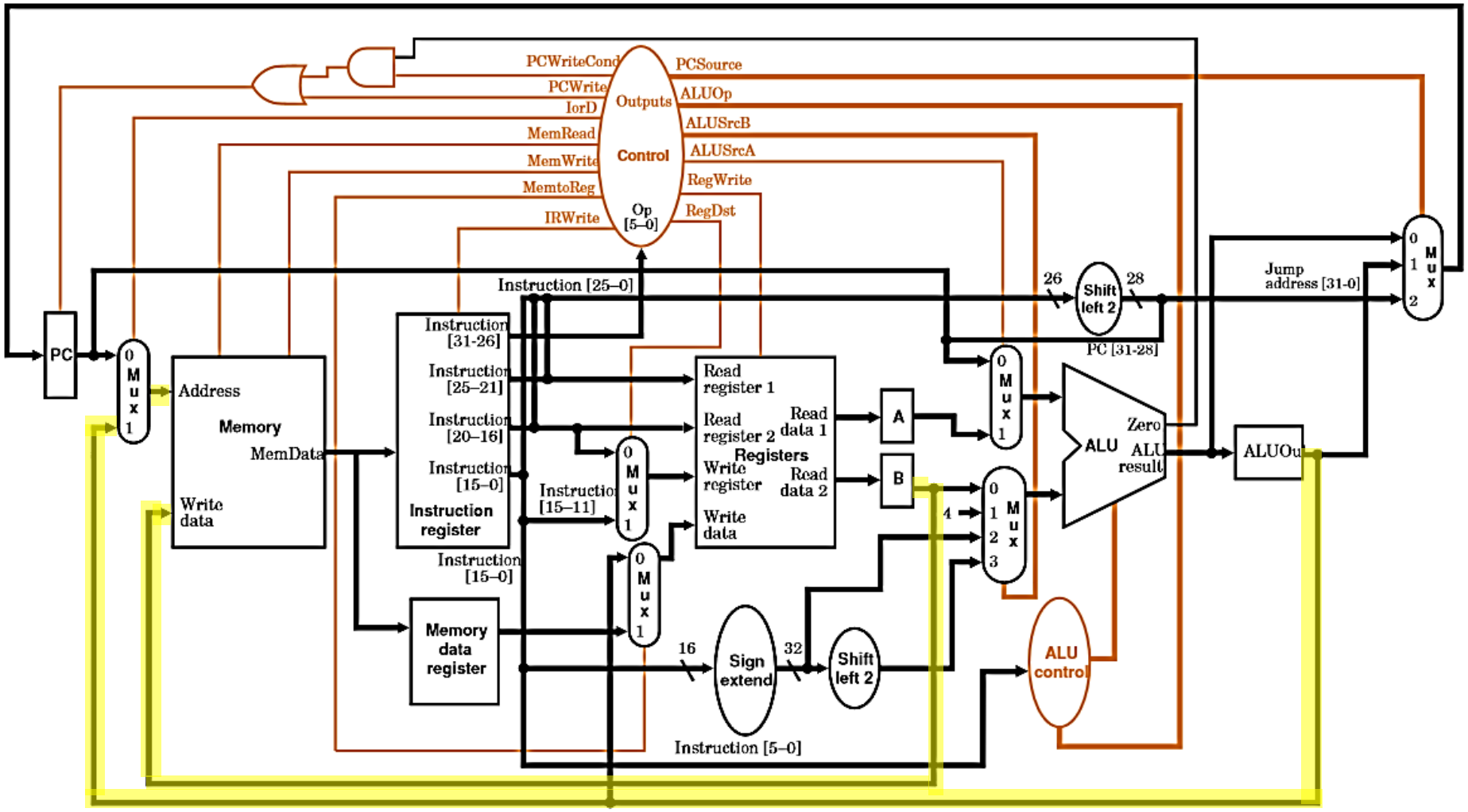

R-TYPE COMPLETION

Signal	Value
MemtoReg	0
RegWrite	1
RegDst	1

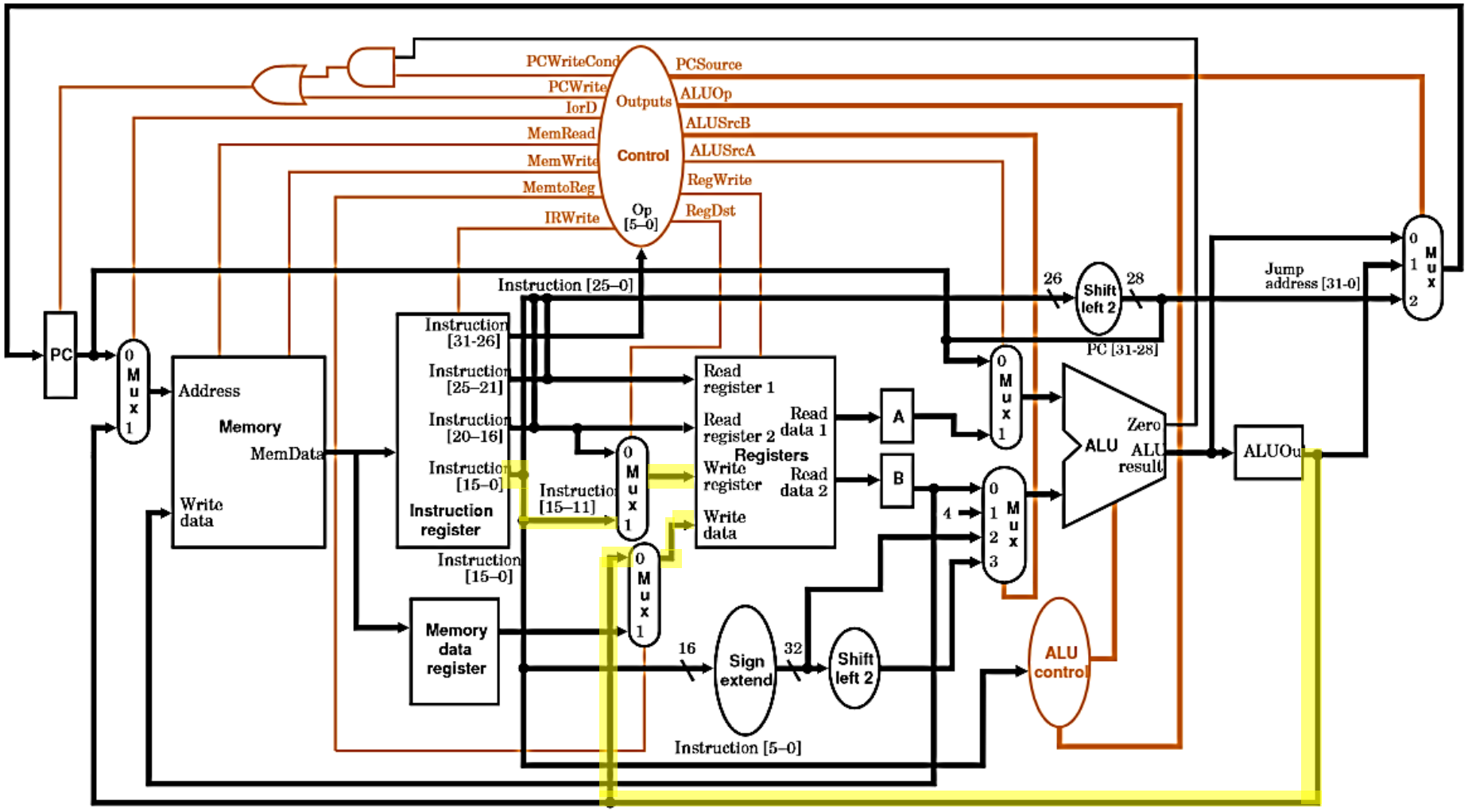

READ COMPLETION STEP

- Load operation:

```
Reg[IR[20-16]] = MDR;
```

READ COMPLETION

Signal	Value
RegWrite	1
MemtoReg	1
RegDst	0

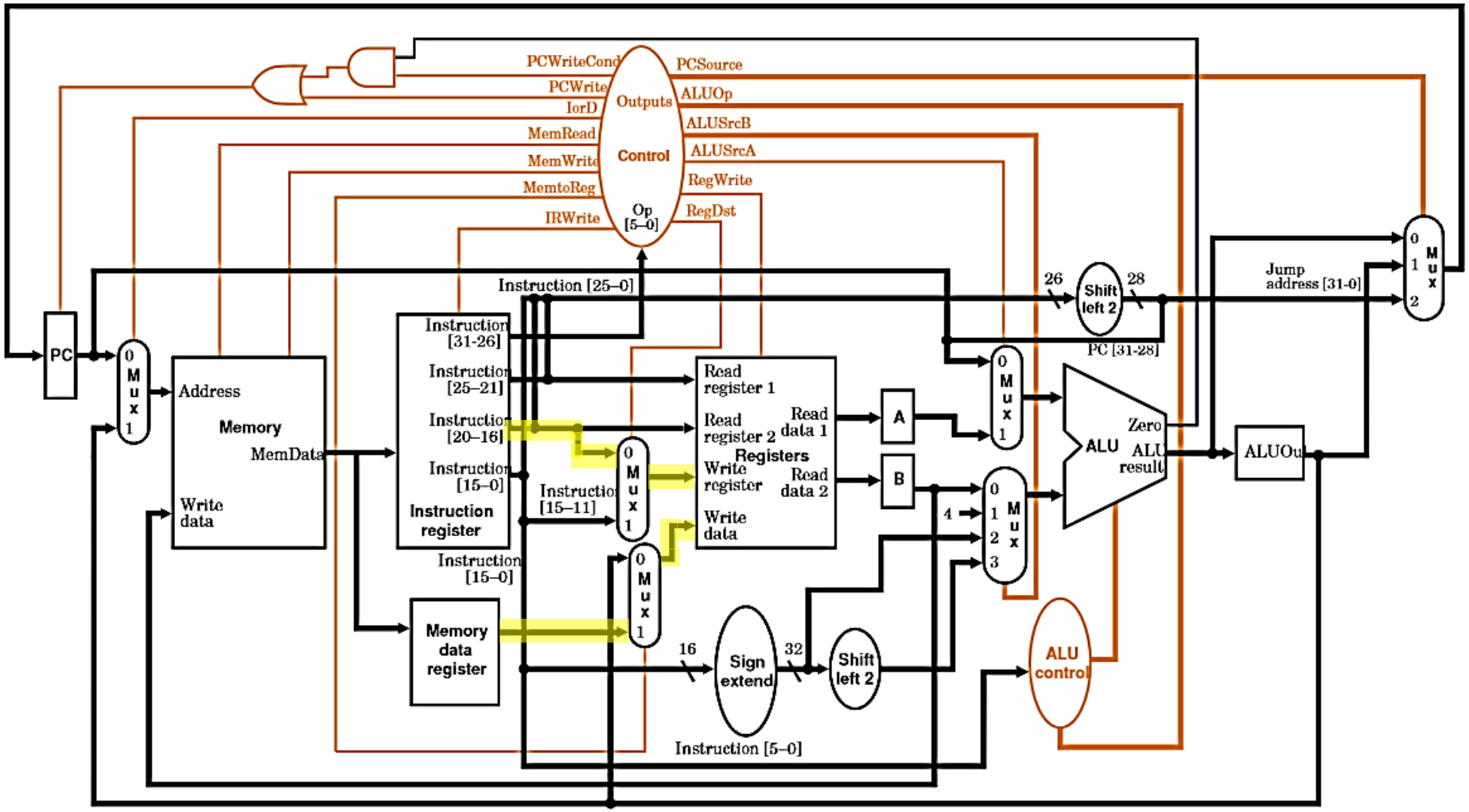

MULTI-CYCLE DATAPATH AND CONTROL

So, now we know what the steps are and what happens in each step for each kind of instruction in our mini-MIPS instruction set.

To make things clearer, let's investigate how multi-cycle works for a particular instruction at a time.

R-FORMAT

R-format instructions require 4 cycles to complete. Let's imagine that we're executing an add instruction.

```
add $s0, $s1, $s2
```

which has the following fields:

opcode	rs	rt	rd	shamt	funct
000000	10001	10010	10000	00000	100000

R-FORMAT: CYCLE 1

Signal	Value
PCWrite	1
IorD	0
MemRead	1
MemWrite	0
IRWrite	1
PCSource	00
ALUOp	00
ALUSrcB	01
ALUSrcA	0
RegWrite	0

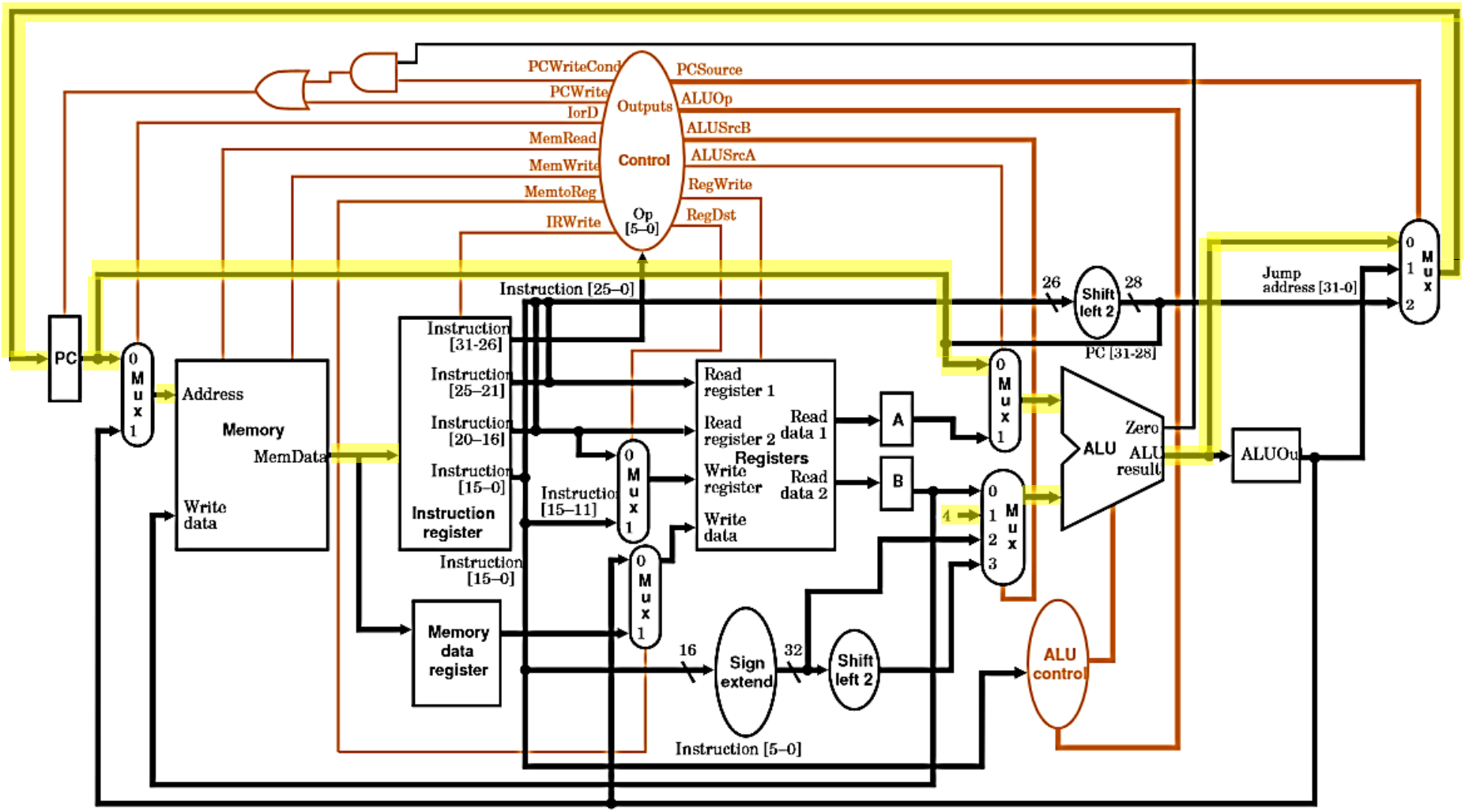

R-FORMAT: CYCLE 2

Signal	Value
ALUOp	00
ALUSrcB	11
ALUSrcA	0

Note that we compute the speculative branching target in this step even though we will not need it. We have nothing better to do while we decode the instruction so we might as well.

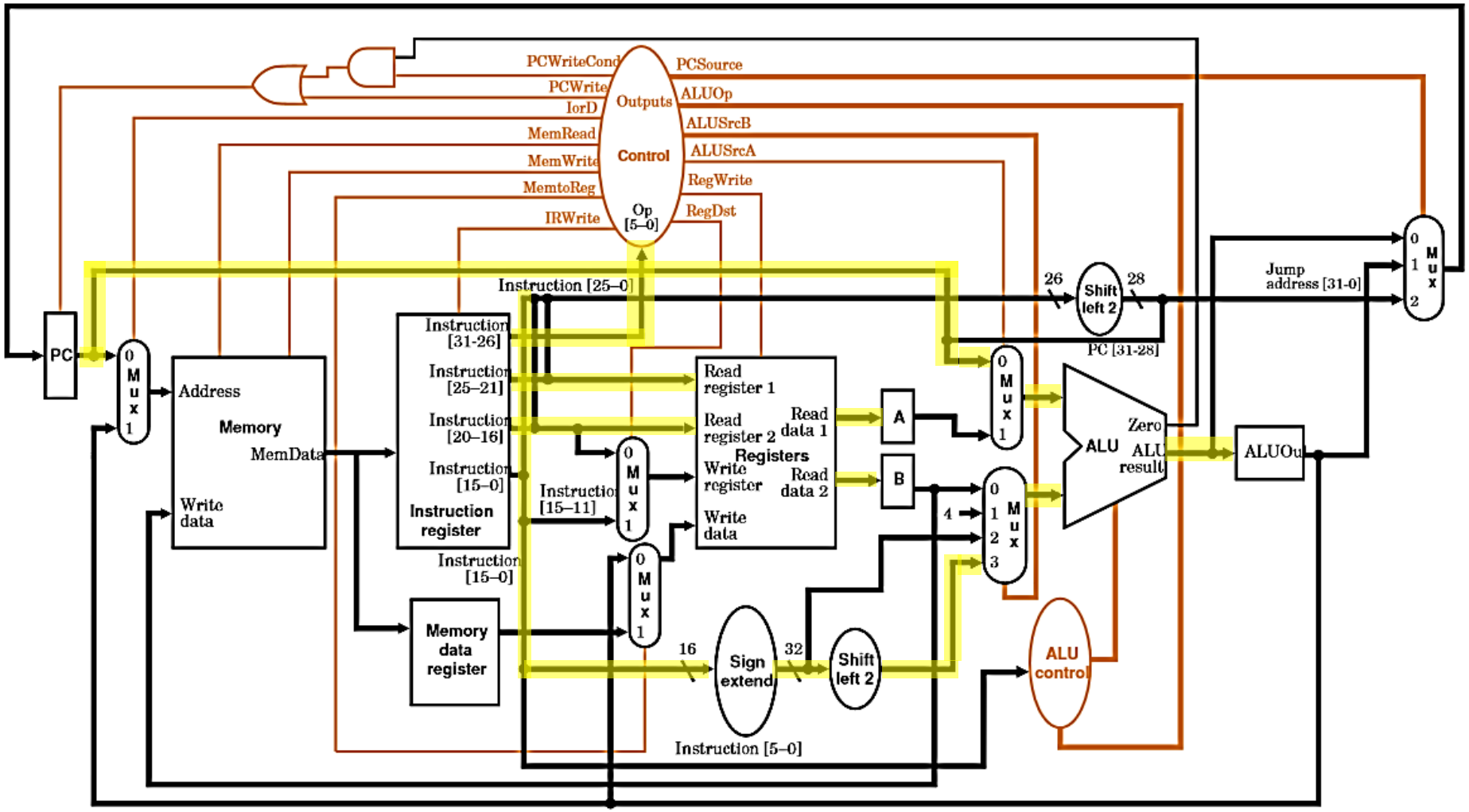

R-FORMAT: CYCLE 3

Signal	Value
ALUOp	10
ALUSrcB	00
ALUSrcA	1

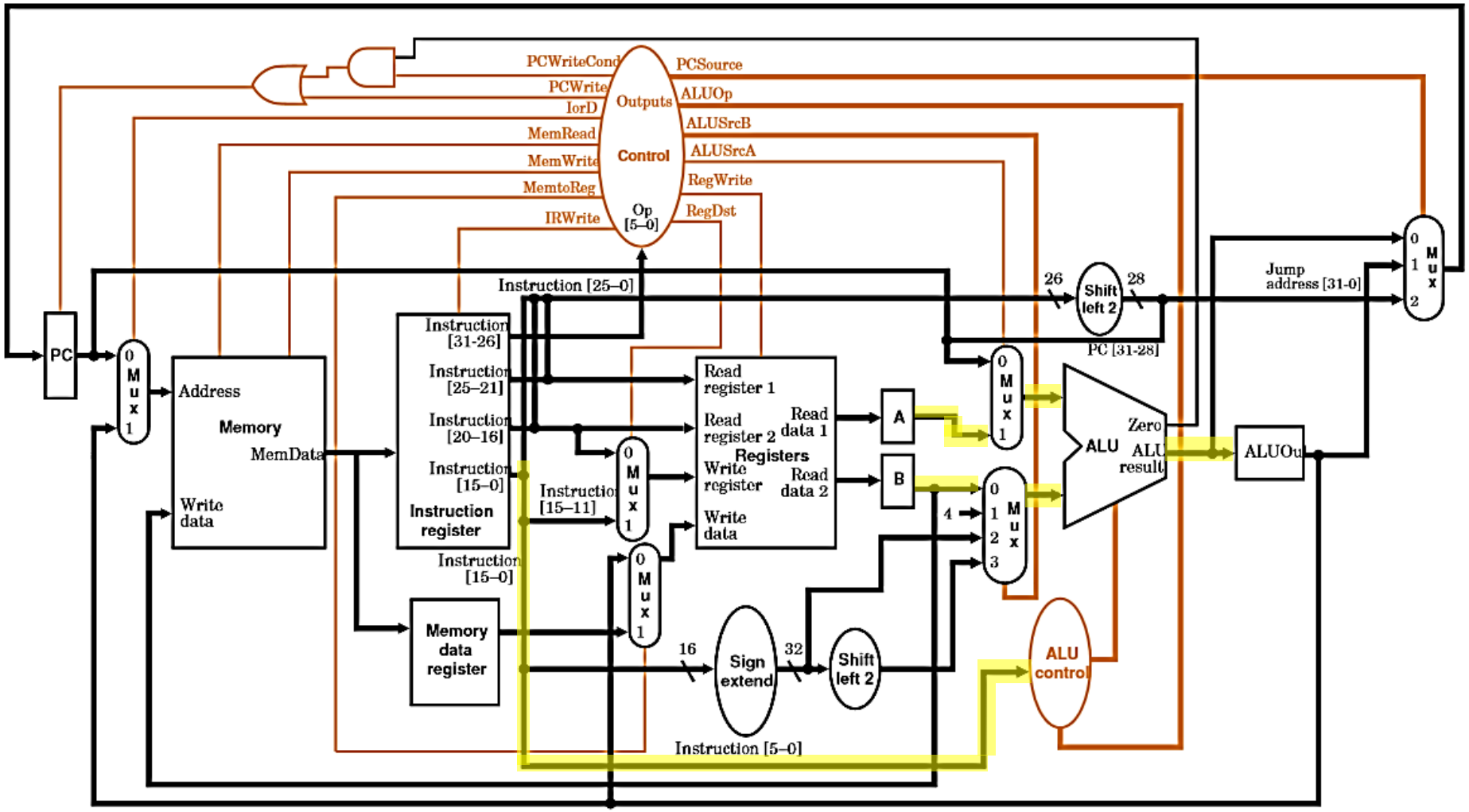

R-FORMAT: CYCLE 4

Signal	Value
MemtoReg	0
RegWrite	1
RegDst	1

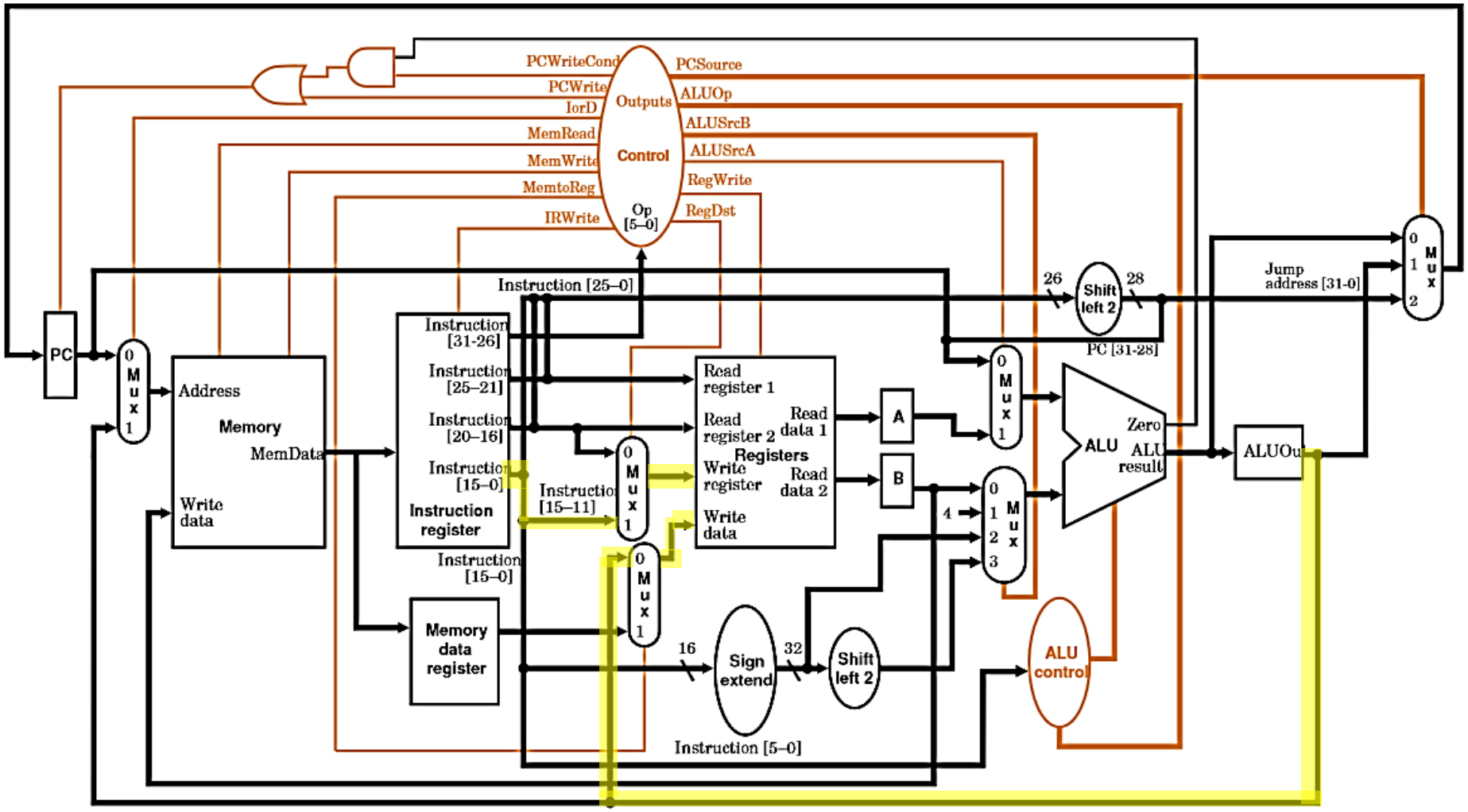

BRANCH

Branch instructions require 3 cycles to complete. Let's imagine that we're executing a beq instruction.

```
beq $s0, $s1, L1
```

which has the following fields:

opcode	rs	rt	immed
000100	10001	10010	XXXXXXXXXXXXXXXX

BRANCH: CYCLE 1

Signal	Value
PCWrite	1
IorD	0
MemRead	1
MemWrite	0
IRWrite	1
PCSource	00
ALUOp	00
ALUSrcB	01
ALUSrcA	0
RegWrite	0

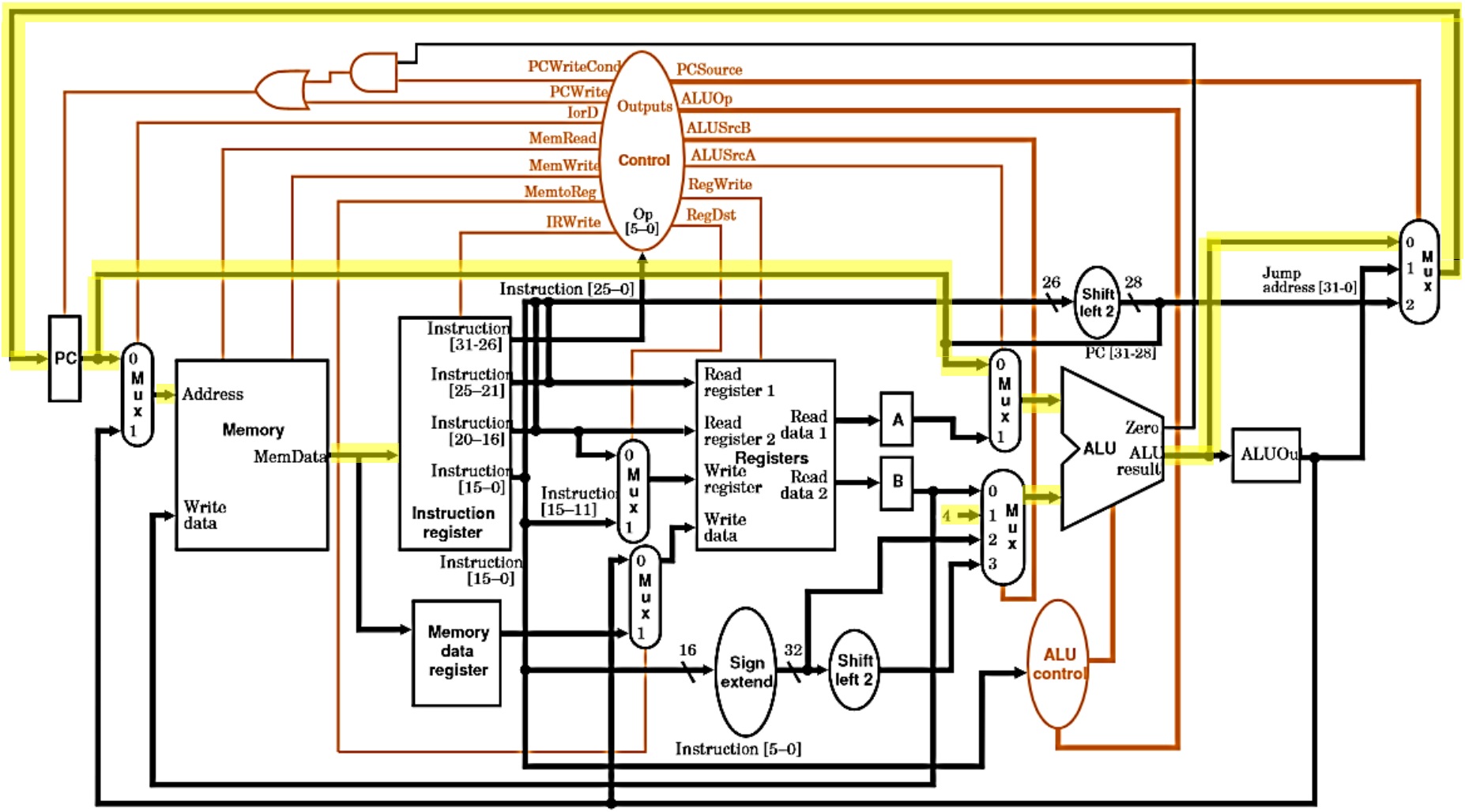

BRANCH: CYCLE 2

Signal	Value
ALUOp	00
ALUSrcB	11
ALUSrcA	0

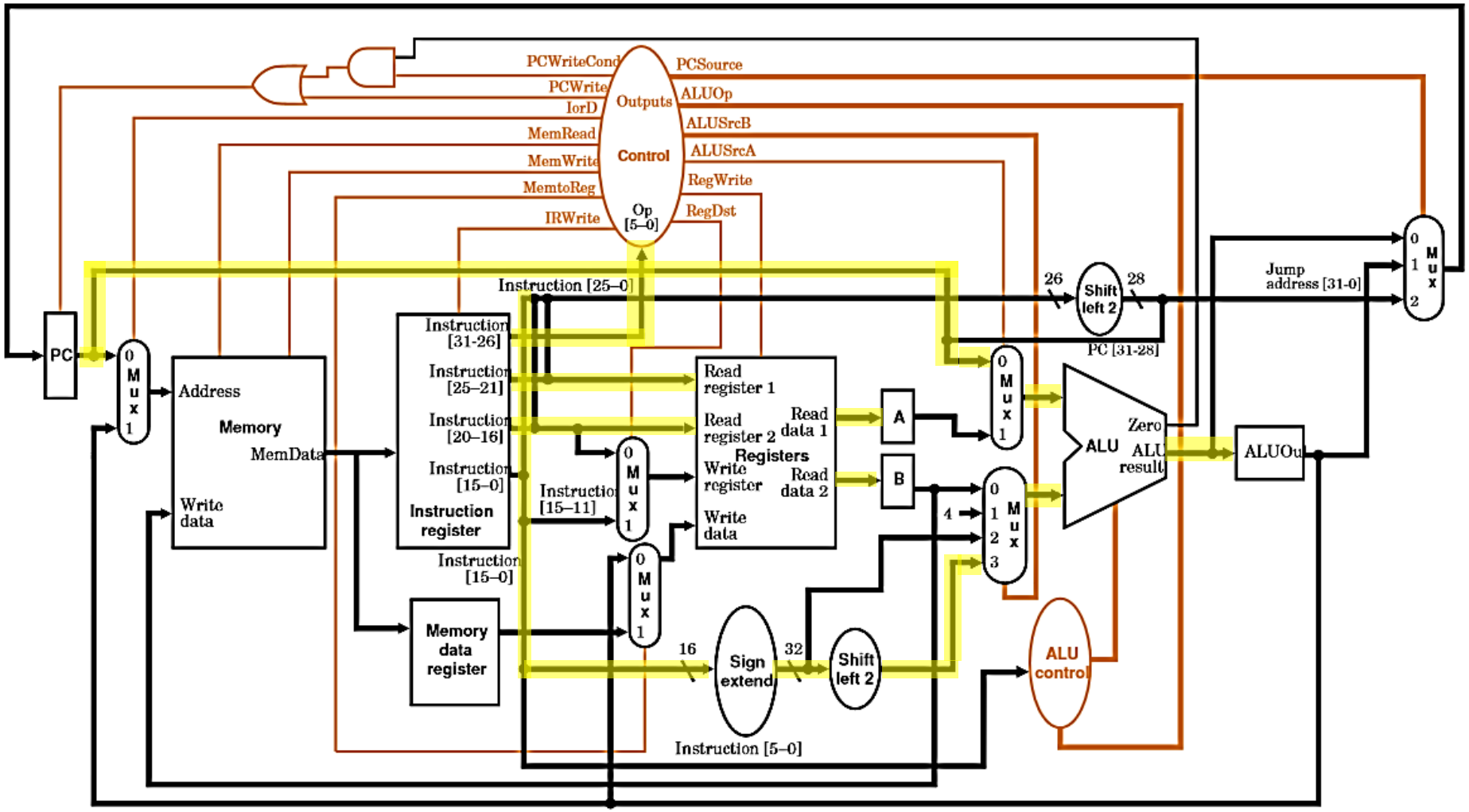

BRANCH: CYCLE 3
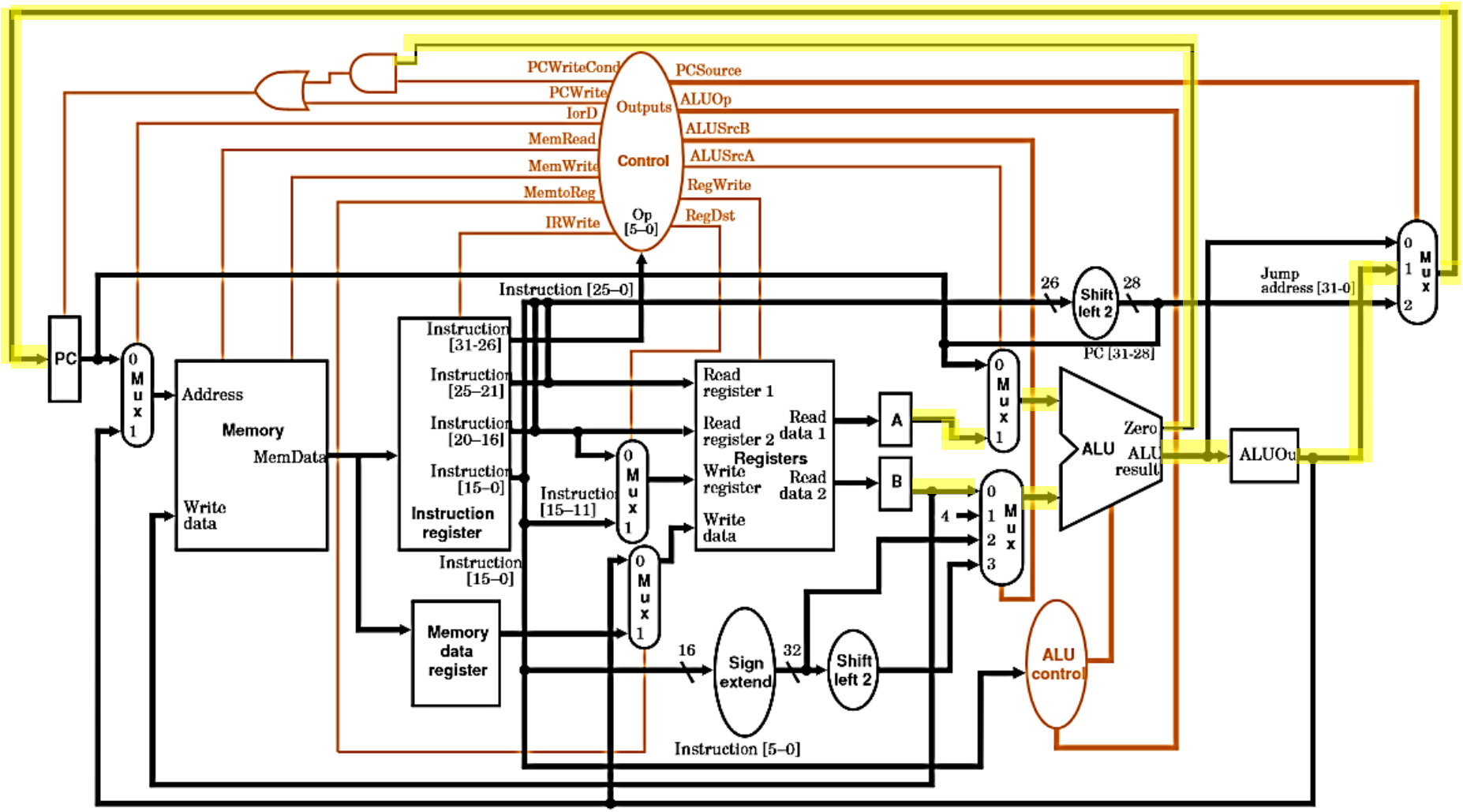
Signal	Value
ALUOp	01
ALUSrcB	00
ALUSrcA	1
PCSource	01
PCWriteCond	1